R1F-2 1/2ZZ NMB

Deep groove ball bearings

TYPE: Ball bearings, Radial ball bearings, Single row, With flange, With shields 2Z, inch size

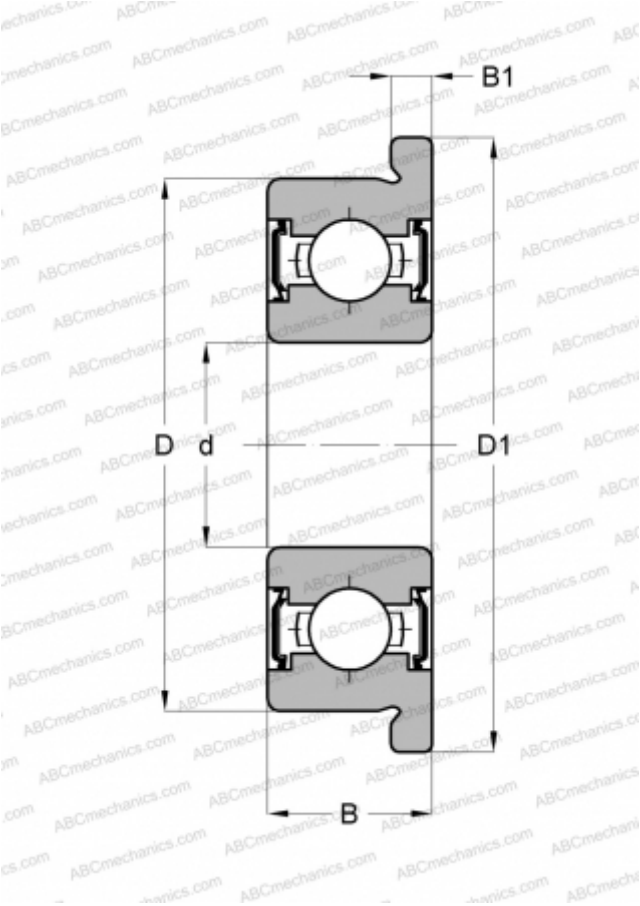

Technical specification

DIMENSIONS, MM	
d	1,191
D	3,967
D1	0,217
B	2,380
B1	0,031
WEIGHT, KG	0,002
MANUFACTURER	NMB

INTERCHANGE	
ABC	FR0 ZZ
EZO	FR0ZZ
ADR	FX3/64ZZ
ISC	FR0ZZS
NTN	FLRA0ZZA
RMB	ULKZ1505
SKF	FX3/64ZZ
GRW	F1191-2Z
BARDEN	FR0SS
MPB - TIMKEN	21/2FCHH
SUPER PRECISION	
FAG	RF0310. 2Z