# SFRW1-5ZZ SMB

Deep groove ball bearings

TYPE: Ball bearings, Radial ball bearings, Single row, With flange, Shields 2Z, corrosion resistant, wide inner ring, inch size

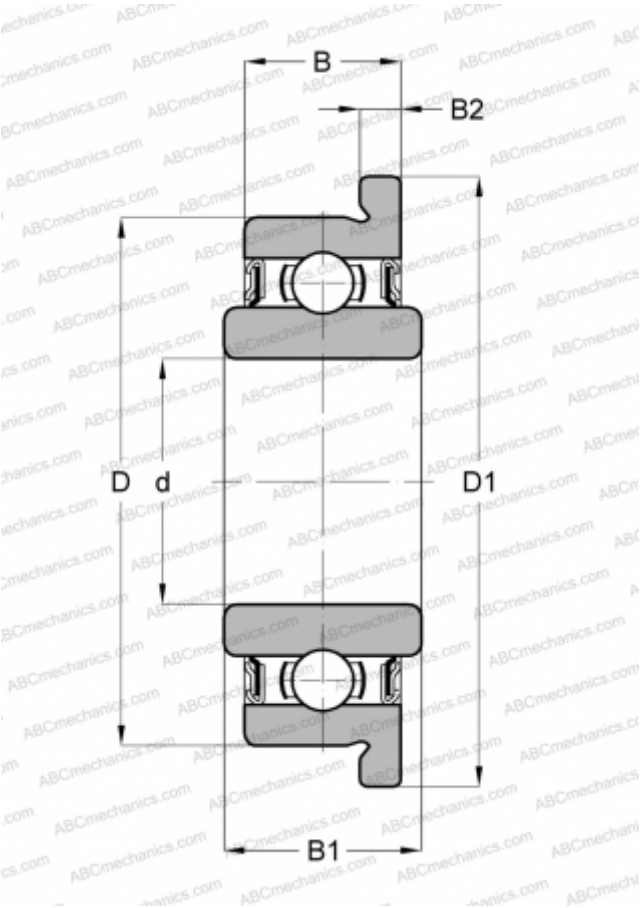


## Technical specification

| DIMENSIONS, MM | |
|---|---|
| d | 2,380 |
| D | 7,938 |
| D1 | 9,119 |
| B | 3,571 |
| B1 | 4,366 |
| B2 | 0,787 |

| | |
|---|---|
| **MANUFACTURER** | SMB |