6202/008 2RSNR ABC

Deep groove ball bearings

TYPE: Ball bearings, Radial ball bearings, Single row, With snap ring groove, Snap ring, seals 2RS

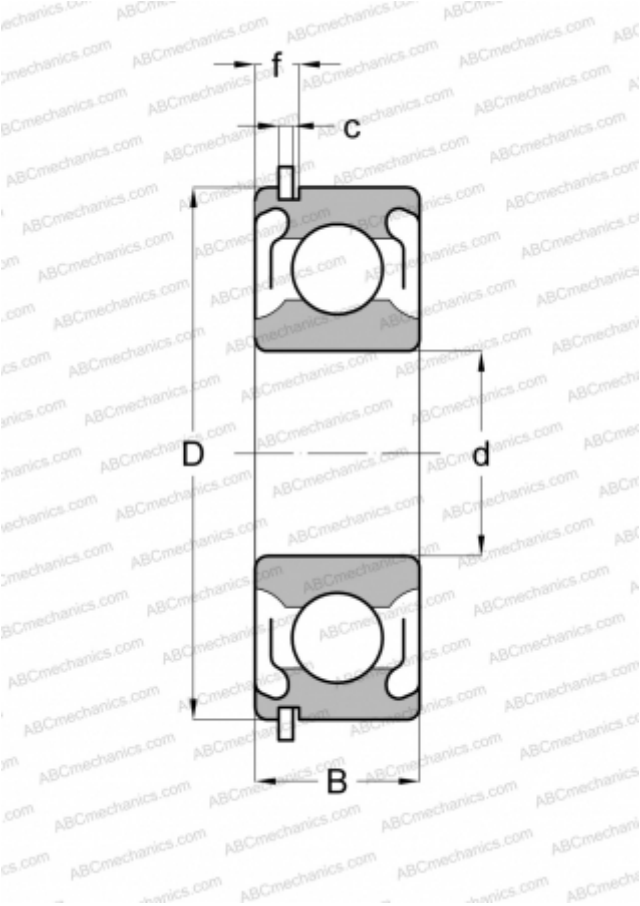

Technical specification

DIMENSIONS, MM	
d	0,500
D	35,000
B	11,000
f	3,404
c	1,346

WEIGHT, KG	0,045
MANUFACTURER	ABC