6300 2RSNR ABC

Deep groove ball bearings

TYPE: Ball bearings, Radial ball bearings, Single row, With snap ring groove, Snap ring, seals 2RS

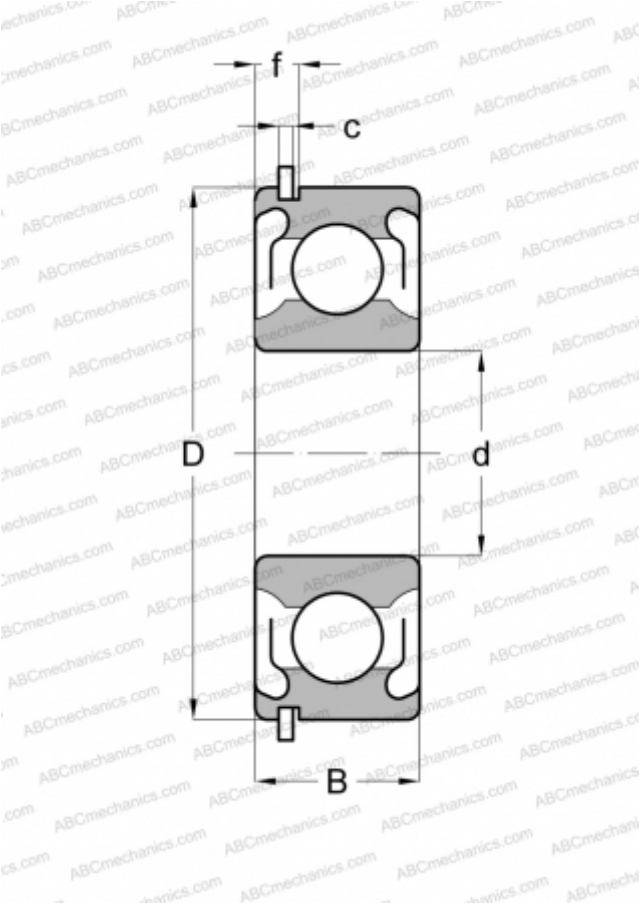

Technical specification

DIMENSIONS, MM	
d	10,000
D	35,000
B	11,000
f	3,404
c	1,346

WEIGHT, KG	0,054
MANUFACTURER	ABC

INTERCHANGE	
MRC	300-SZZG
FAG	6300-2RSNR
STEYR	6300-2RSNR