# 6204 DDC3G81 FAG

Deep groove ball bearings

TYPE: Ball bearings, Radial ball bearings, Single row, For car hubs, FAG production

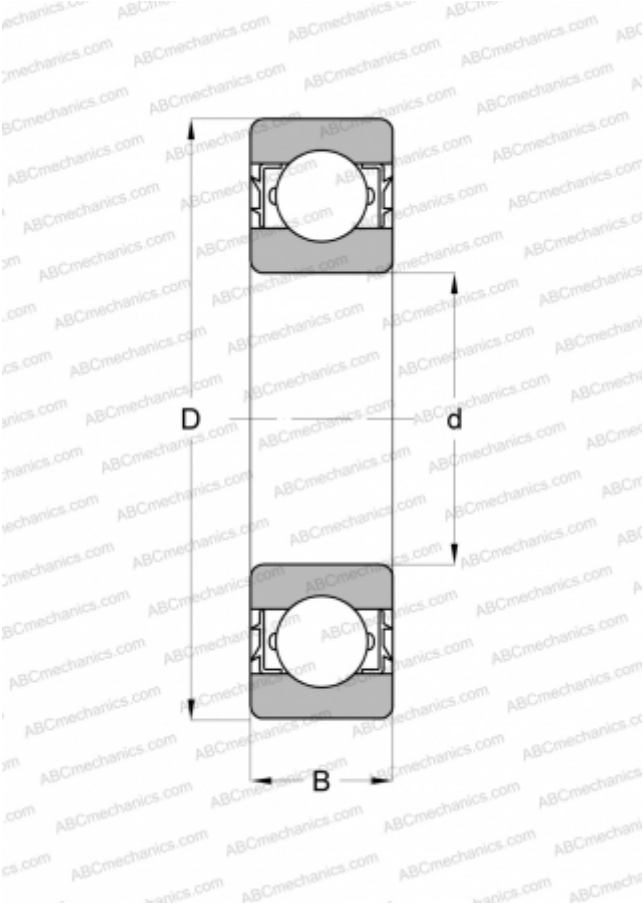


## Technical specification

| DIMENSIONS, MM | |
|---|---|
| d | 20,000 |
| D | 47,000 |
| B | 14,000 |

| | |
|---|---|
| **MANUFACTURER** | FAG |