7304 B 2RS TVP FAG

Angular contact ball bearings

TYPE: Ball bearings, Angular contact ball bearing, Single row, Contact angle 40°, For single use, polyamide cage, with seals

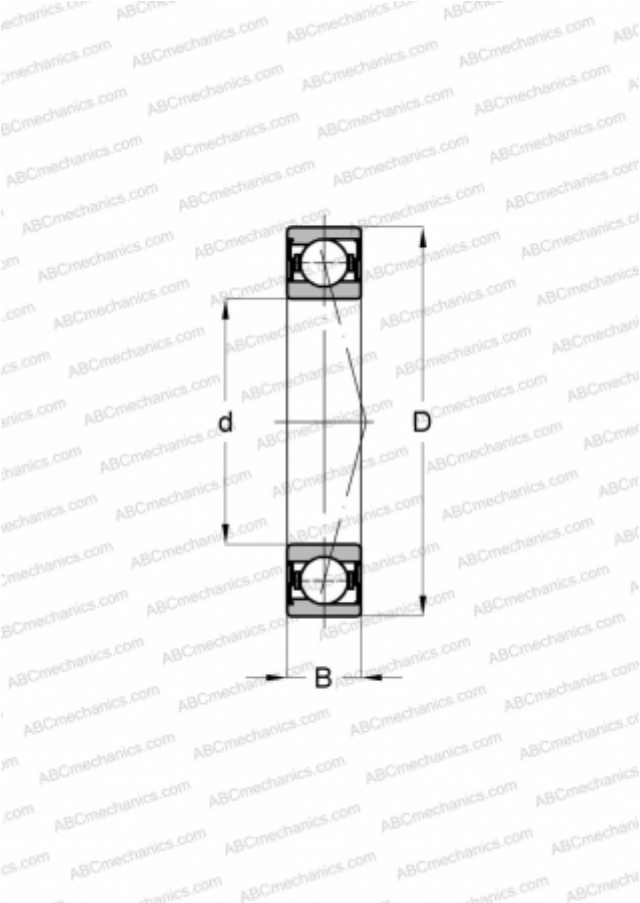

Technical specification

DIMENSIONS, MM	
d	20,000
D	52,000
B	15,000
WEIGHT, KG	0,143
MANUFACTURER	FAG