7301 B JP UO/7301 B JP UA ABC

Angular contact ball bearings

TYPE: Ball bearings, Angular contact ball bearing, Single row, Contact angle 40°, For universal use, steel cage

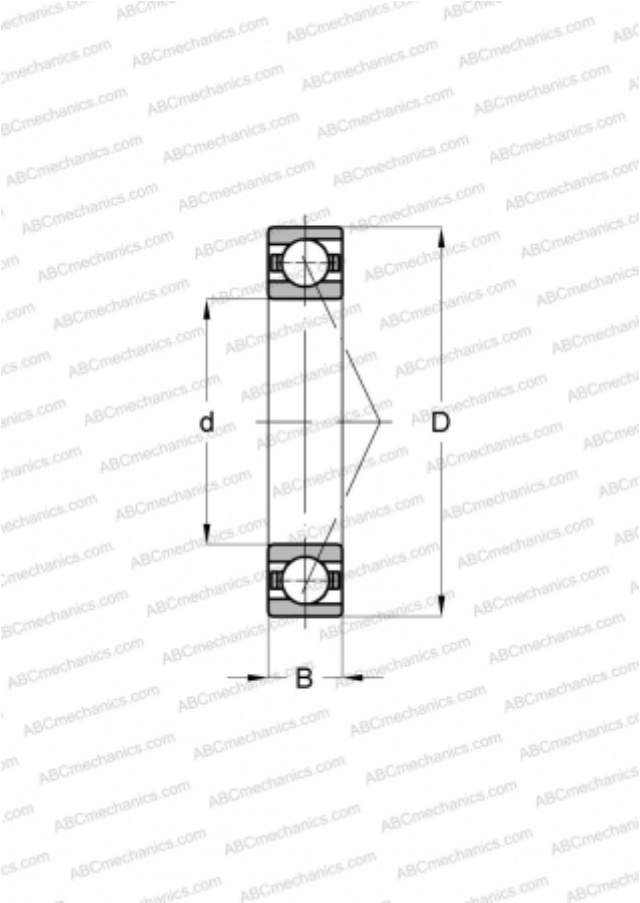

Technical specification

DIMENSIONS, MM	
d	12,000
D	37,000
B	12,000
WEIGHT, KG	0,063
MANUFACTURER	ABC
INTERCHANGE	
FAG	7301 B JP UO/7301 B JP UA