7202 B JP UO/7202 B JP UA FAG

Angular contact ball bearings

TYPE: Ball bearings, Angular contact ball bearing, Single row, Contact angle 40°, For universal use, steel cage

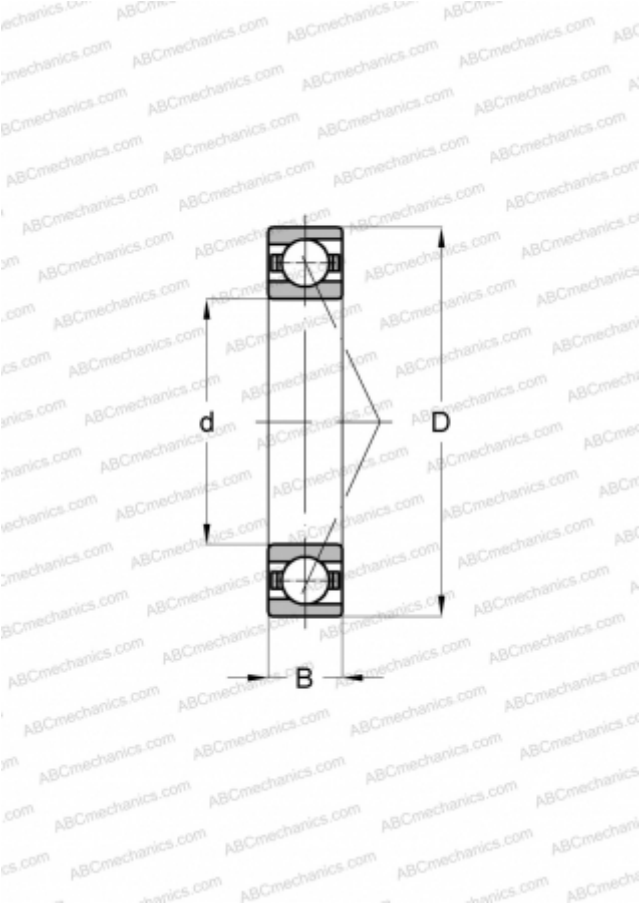

Technical specification

DIMENSIONS, MM	
d	15,000
D	35,000
B	11,000
WEIGHT, KG	0,047
MANUFACTURER	FAG
INTERCHANGE	
ABC	7202 B JP UO/7202 B JP UA