7302 B MP FAG

Angular contact ball bearings

TYPE: Ball bearings, Angular contact ball bearing, Single row, Contact angle 40°, For single use, pressed brass cage

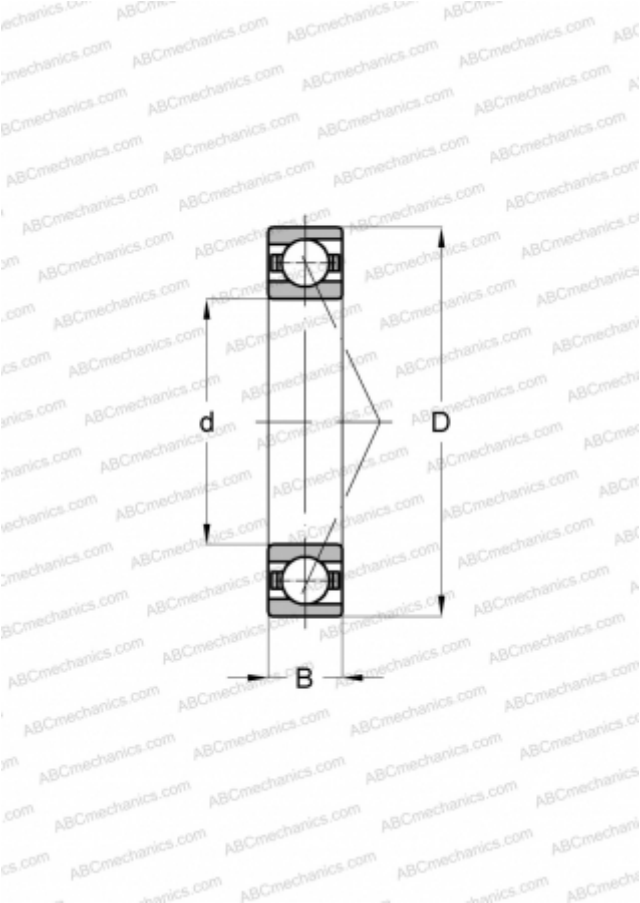

Technical specification

DIMENSIONS, MM	
d	15,000
D	42,000
B	13,000
WEIGHT, KG	0,089
MANUFACTURER	FAG