EX6 7CE1 UF SNFA

Angular contact ball bearings

TYPE: Ball bearings, Angular contact ball bearing, Precision (spindle), Contact angle 15°, Standard, mounting by pairs or sets, heavy preload (SNFA)

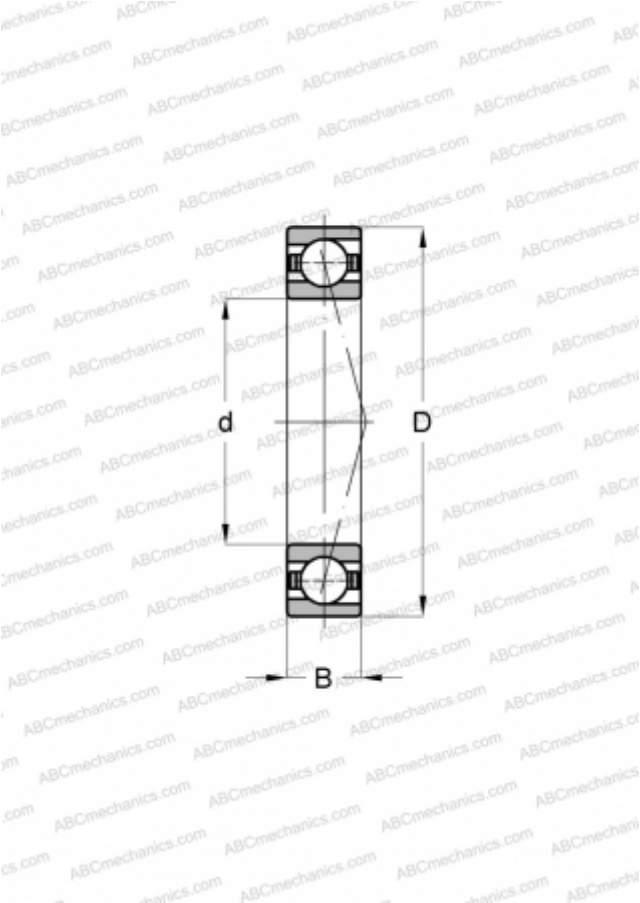

Technical specification

DIMENSIONS, MM	
d	6,000
D	17,000
B	6,000
WEIGHT, KG	0,005
MANUFACTURER	SNFA