EX7 7CE1 UF SNFA

Angular contact ball bearings

TYPE: Ball bearings, Angular contact ball bearing, Precision (spindle), Contact angle 15°, Standard, mounting by pairs or sets, heavy preload (SNFA)

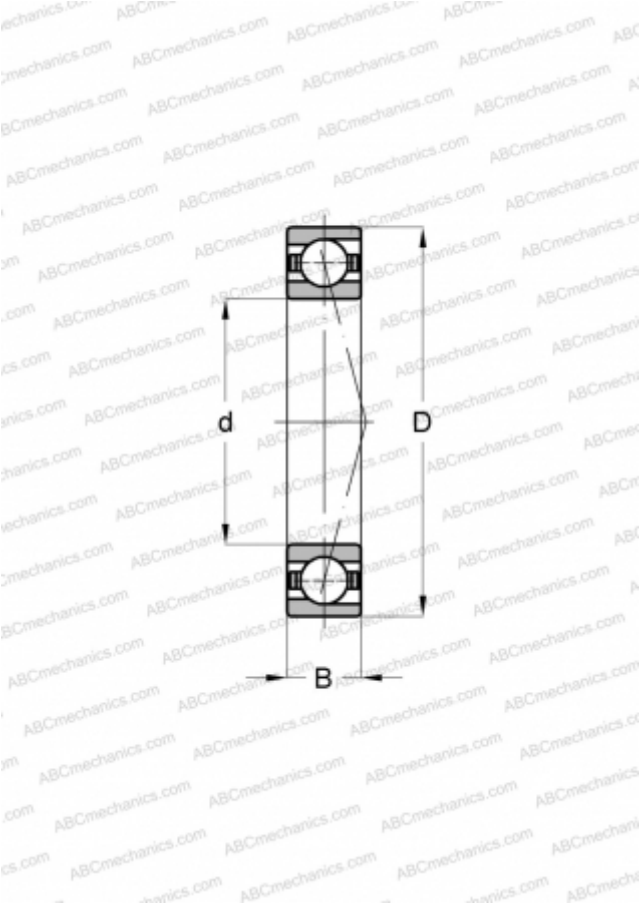

Technical specification

DIMENSIONS, MM	
d	7,000
D	19,000
B	6,000
WEIGHT, KG	0,008
MANUFACTURER	SNFA