HSS71904CTP4S UH FAG

Angular contact ball bearings

TYPE: Ball bearings, Angular contact ball bearing, Precision (spindle), Contact angle 15°, High speed, non-contact seal, mounting by pair or sets, heavy preload (FAG)

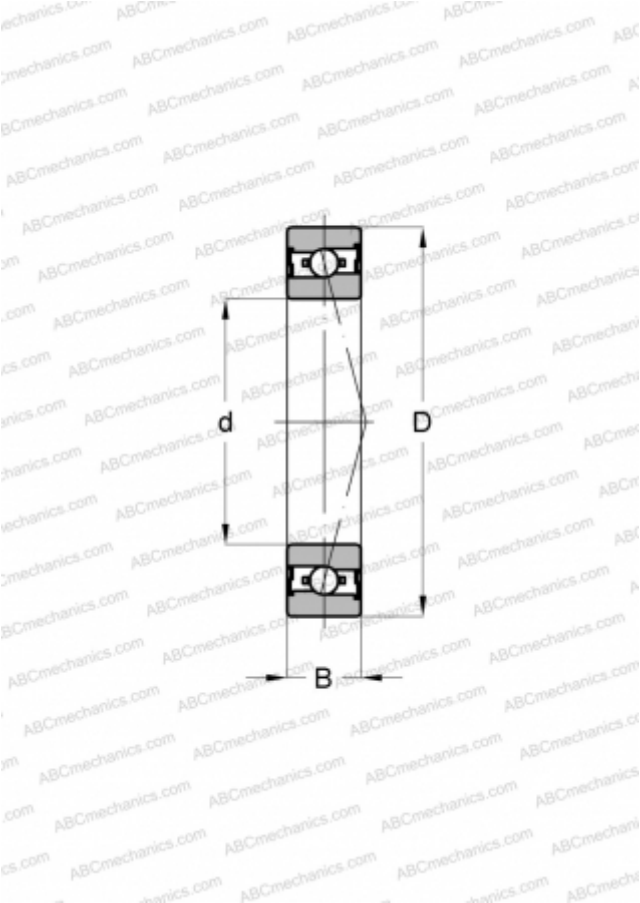

Technical specification

DIMENSIONS, MM	
d	20,000
D	37,000
B	9,000
WEIGHT, KG	0,040
MANUFACTURER	FAG