S7006 CB GC P4A SKF

Angular contact ball bearings

TYPE: Ball bearings, Angular contact ball bearing, Precision (spindle), Contact angle 15°, High speed, design B, mounting by pair or sets, non-contact seal on both side, heavy preload (SKF)

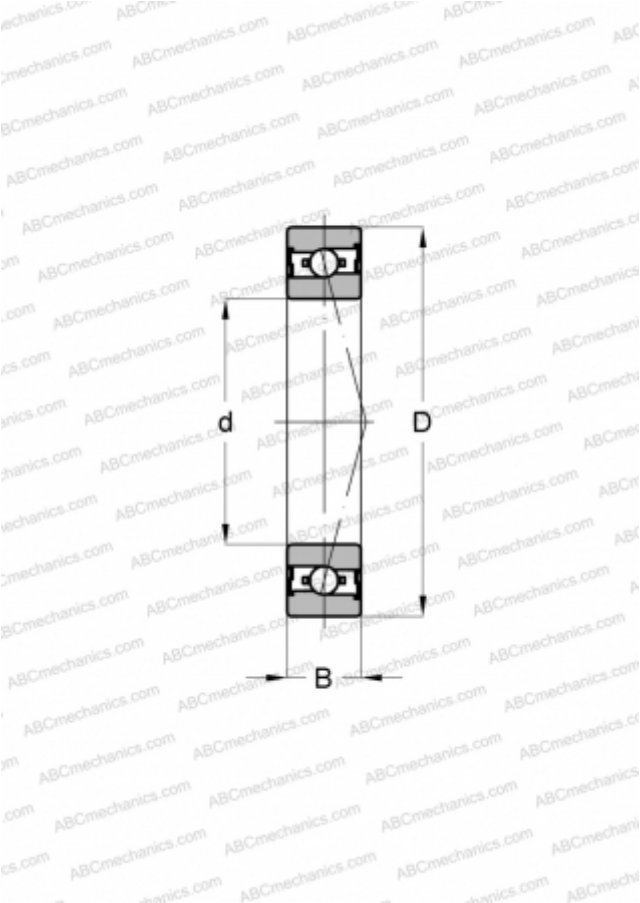

Technical specification

DIMENSIONS, MM	
d	30,000
D	55,000
B	13,000

MANUFACTURER	SKF