HCB71801CTPAP4 UL FAG

Angular contact ball bearings

TYPE: Ball bearings, Angular contact ball bearing, Precision (spindle), Contact angle 15°, Ceramic ball, mounting by pair or sets, light preload (FAG)

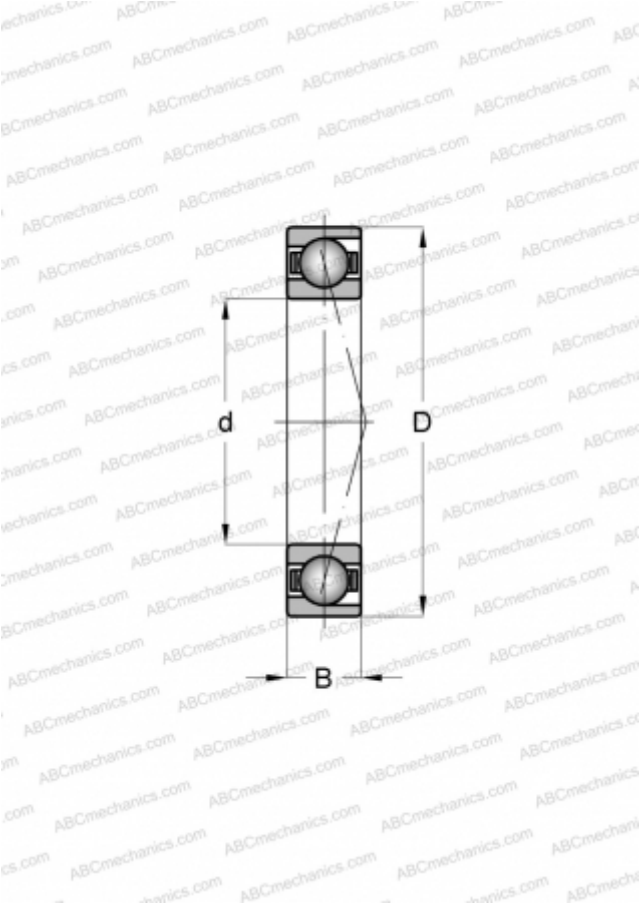

Technical specification

DIMENSIONS, MM	
d	12,000
D	21,000
B	5,000
WEIGHT, KG	0,010
MANUFACTURER	FAG