71900 CD GB HC P4A SKF

Angular contact ball bearings

TYPE: Ball bearings, Angular contact ball bearing, Precision (spindle), Contact angle 15°, Ceramic ball, mounting by pair or sets, medium preload (SKF)

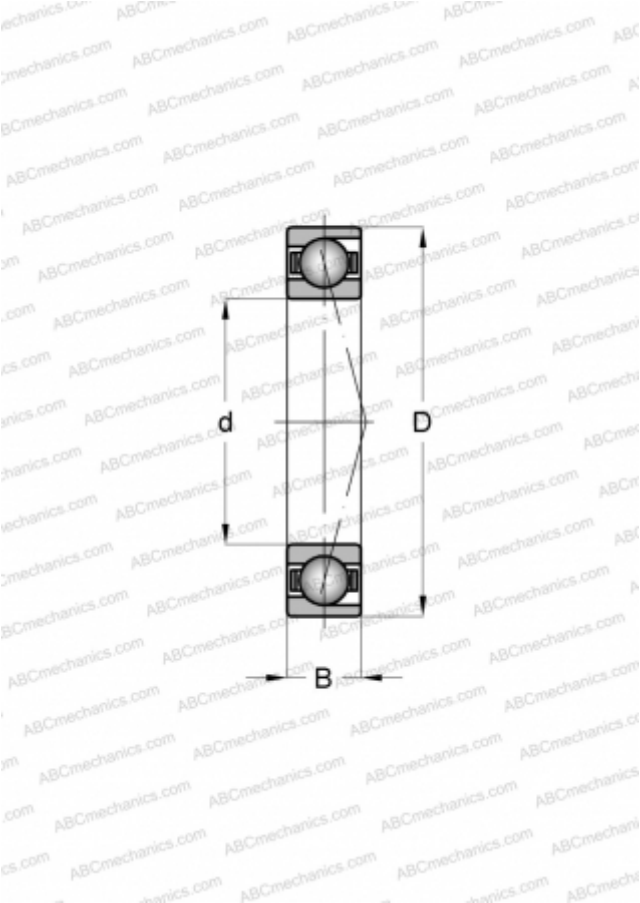

Technical specification

DIMENSIONS, MM	
d	10,000
D	22,000
B	6,000
WEIGHT, KG	0,008
MANUFACTURER	SKF