EX10 NS 7CE1 UF SNFA

Angular contact ball bearings

TYPE: Ball bearings, Angular contact ball bearing, Precision (spindle), Contact angle 15°, Ceramic ball, mounting by pair or sets, heavy preload (SNFA)

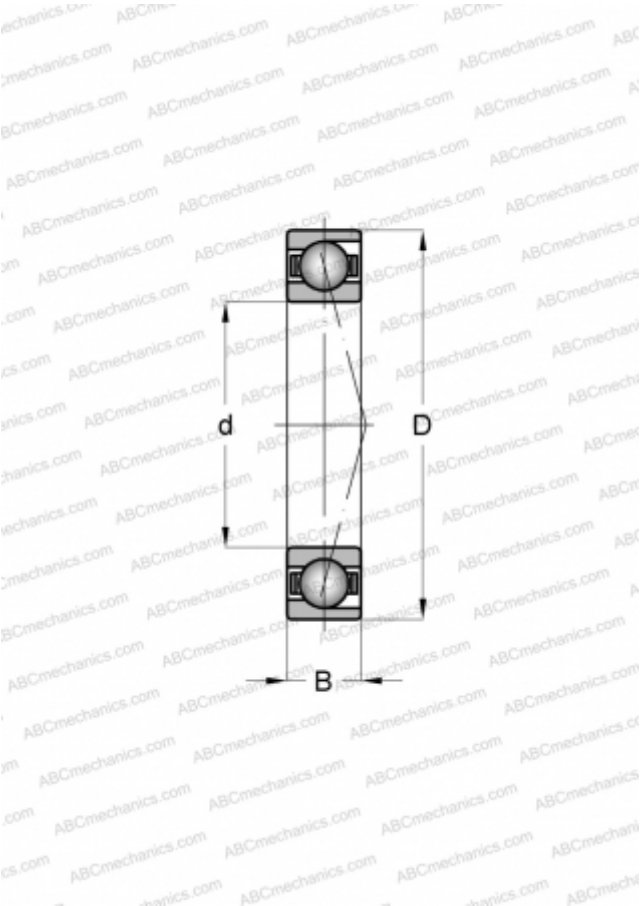

Technical specification

DIMENSIONS, MM	
d	10,000
D	26,000
B	8,000
WEIGHT, KG	0,020
MANUFACTURER	SNFA