HCS71903CTP4S UL FAG

Angular contact ball bearings

TYPE: Ball bearings, Angular contact ball bearing, Precision (spindle), Contact angle 15°, High speed, ceramic ball, mounting by pair or sets, non-contact seal, light preload (FAG)

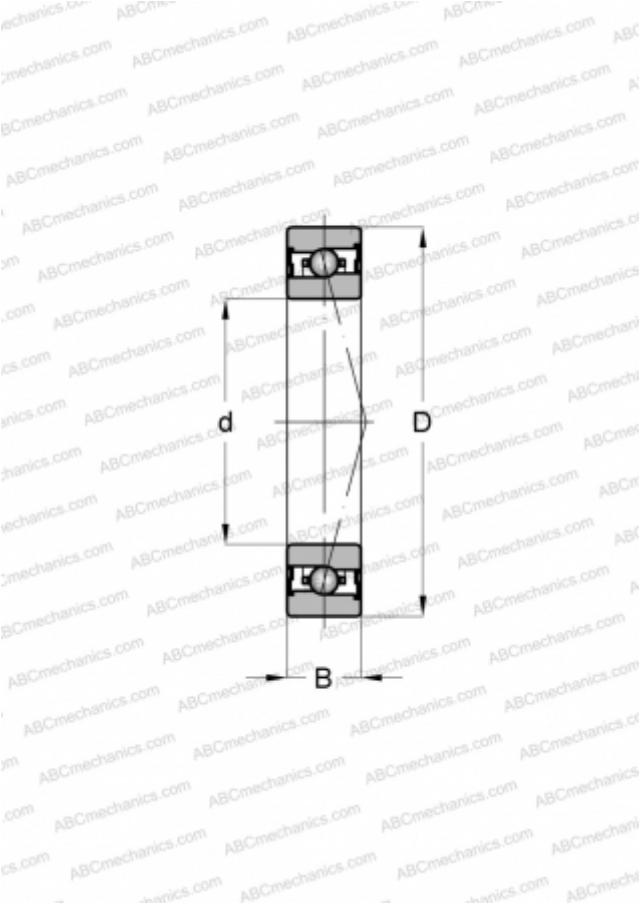

Technical specification

DIMENSIONS, MM	
d	17,000
D	30,000
B	7,000
WEIGHT, KG	0,020
MANUFACTURER	FAG