725 CTRSULP3/ 725 CTYNSULP4 NSK

Angular contact ball bearings

TYPE: Ball bearings, Angular contact ball bearing, Precision (spindle), Contact angle 15°, Standard, mounting by pairs or sets, light preload (NSK)

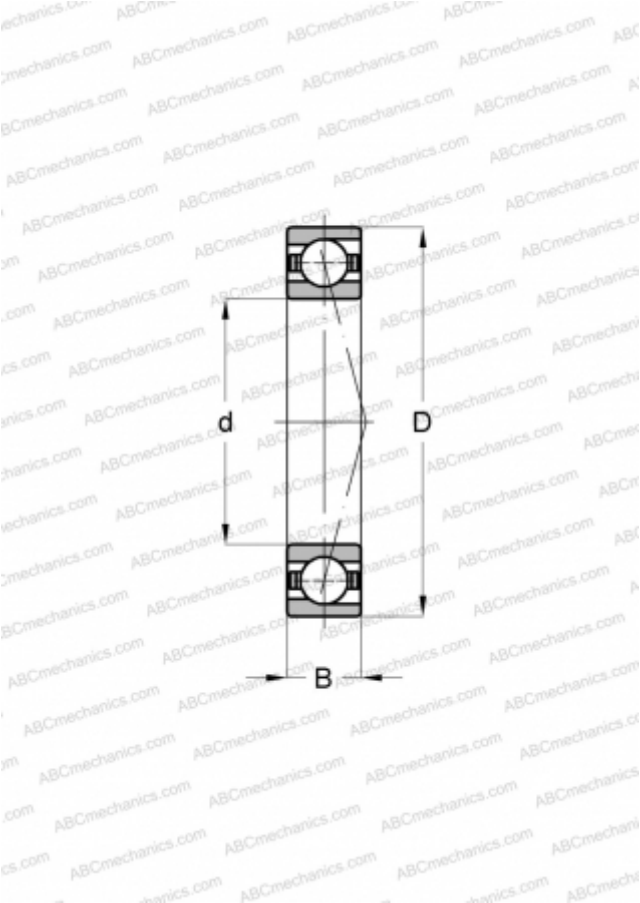

Technical specification

DIMENSIONS, MM	
d	5,000
D	16,000
B	5,000
WEIGHT, KG	0,005
MANUFACTURER	NSK