35BNR29H TV1VSUELP3 NSK

Angular contact ball bearings

TYPE: Ball bearings, Angular contact ball bearing, Precision (spindle), Contact angle 18°, High speed, ceramic ball, mounting by pair or sets, non-contact seal, extra light preload (NSK)

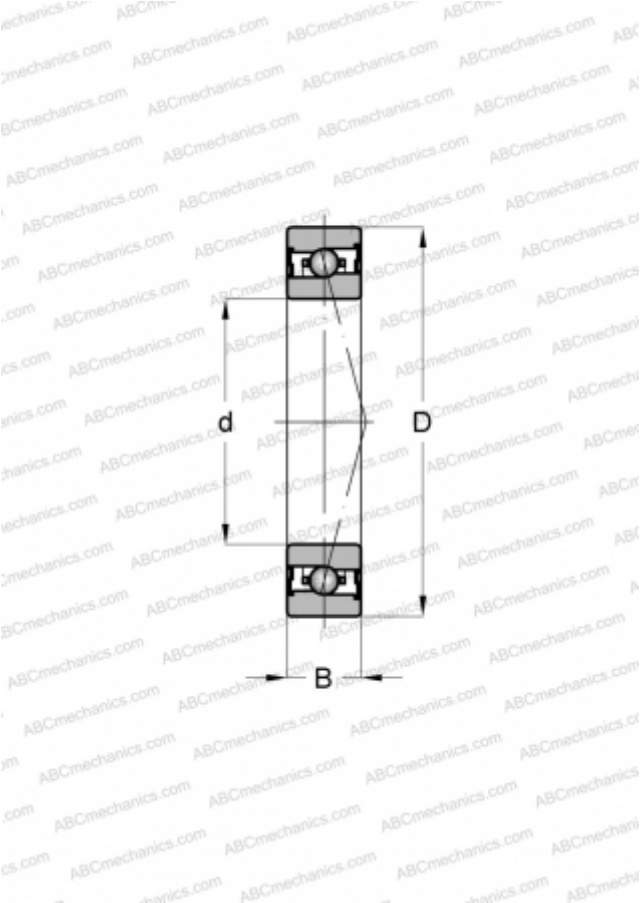

Technical specification

DIMENSIONS, MM	
d	35,000
D	55,000
B	13,000
WEIGHT, KG	0,081
MANUFACTURER	NSK