B71801ETPAP4 UM FAG

Angular contact ball bearings

TYPE: Ball bearings, Angular contact ball bearing, Precision (spindle), Contact angle 25°, Standard, for mounting in pairs or sets, medium preload (FAG)

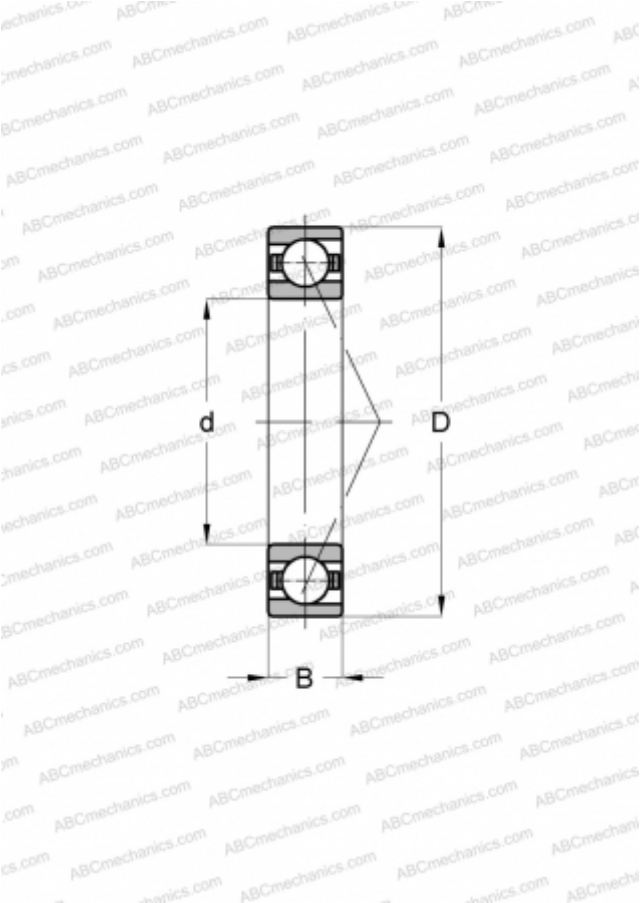

Technical specification

DIMENSIONS, MM	
d	12,000
D	21,000
B	5,000
WEIGHT, KG	0,010
MANUFACTURER	FAG