E210 7CE3 UM SNFA

Angular contact ball bearings

TYPE: Ball bearings, Angular contact ball bearing, Precision (spindle), Contact angle 25°, Standard, for mounting in pairs or sets, medium preload (SNFA)

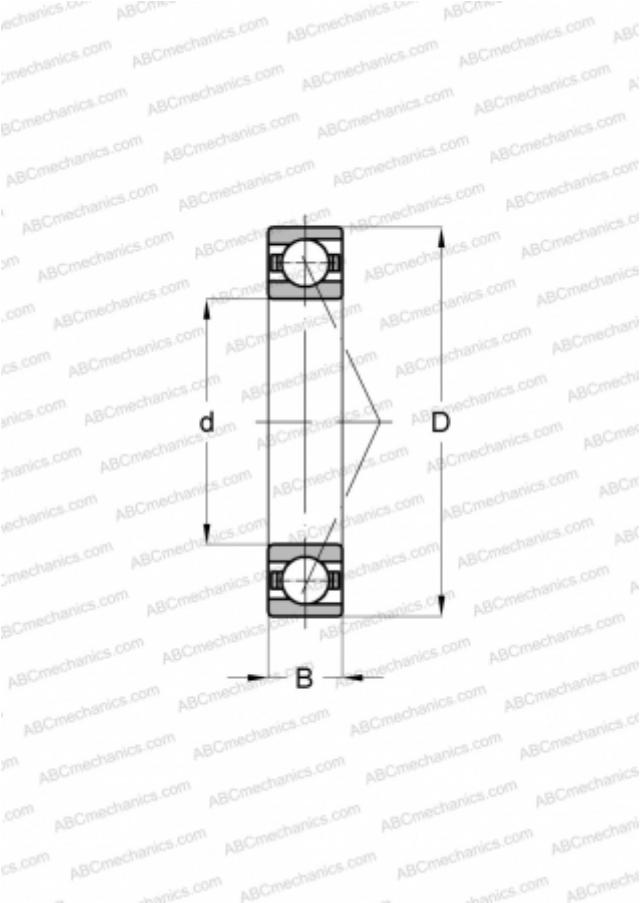

Technical specification

DIMENSIONS, MM	
d	10,000
D	30,000
B	9,000
WEIGHT, KG	0,030
MANUFACTURER	SNFA