HS706ETP4S UM FAG

Angular contact ball bearings

TYPE: Ball bearings, Angular contact ball bearing, Precision (spindle), Contact angle 25°, High speed, mounting by pair or sets, medium preload (FAG)

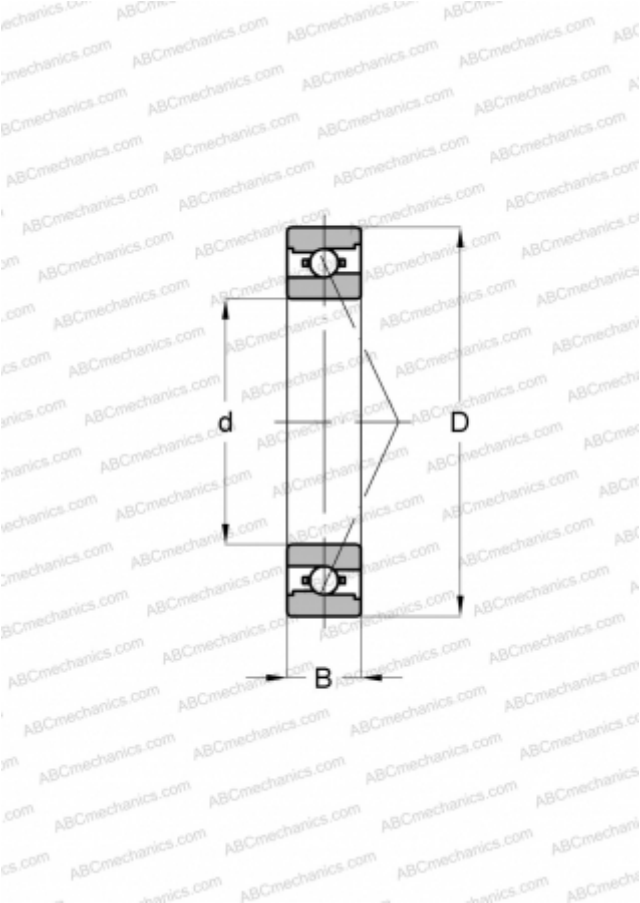

Technical specification

DIMENSIONS, MM	
d	6,000
D	17,000
B	6,000
WEIGHT, KG	0,010
MANUFACTURER	FAG