ZSB100E UM BARDEN

Angular contact ball bearings

TYPE: Ball bearings, Angular contact ball bearing, Precision (spindle), Contact angle 25°, High speed, mounting by pair or sets, medium preload (BARDEN)

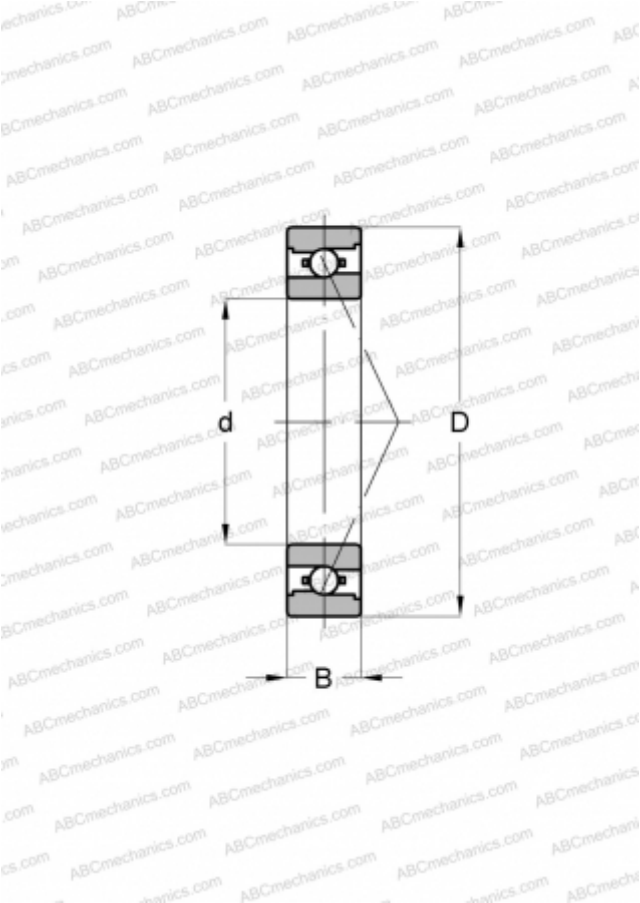

Technical specification

DIMENSIONS, MM	
d	10,000
D	26,000
B	8,000
WEIGHT, KG	0,020
MANUFACTURER	BARDEN