HCB71900ETP4S UL FAG

Angular contact ball bearings

TYPE: Ball bearings, Angular contact ball bearing, Precision (spindle), Contact angle 25°, Ceramic ball, mounting by pair or sets, light preload (FAG)

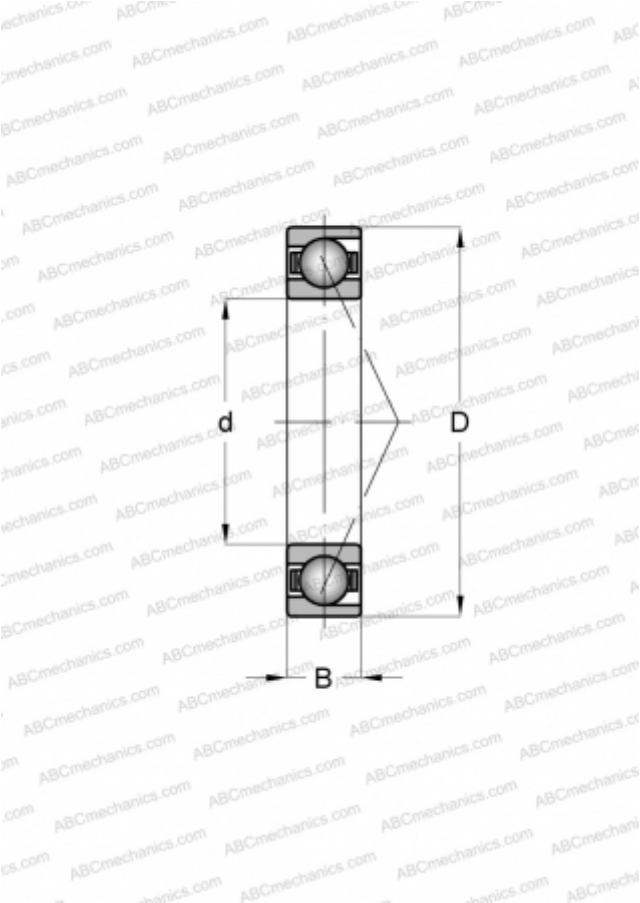

Technical specification

DIMENSIONS, MM	
d	10,000
D	22,000
B	6,000
WEIGHT, KG	0,008
MANUFACTURER	FAG