HCB7201ETP4S UH FAG

Angular contact ball bearings

TYPE: Ball bearings, Angular contact ball bearing, Precision (spindle), Contact angle 25°, Ceramic ball, mounting by pair or sets, heavy preload (FAG)

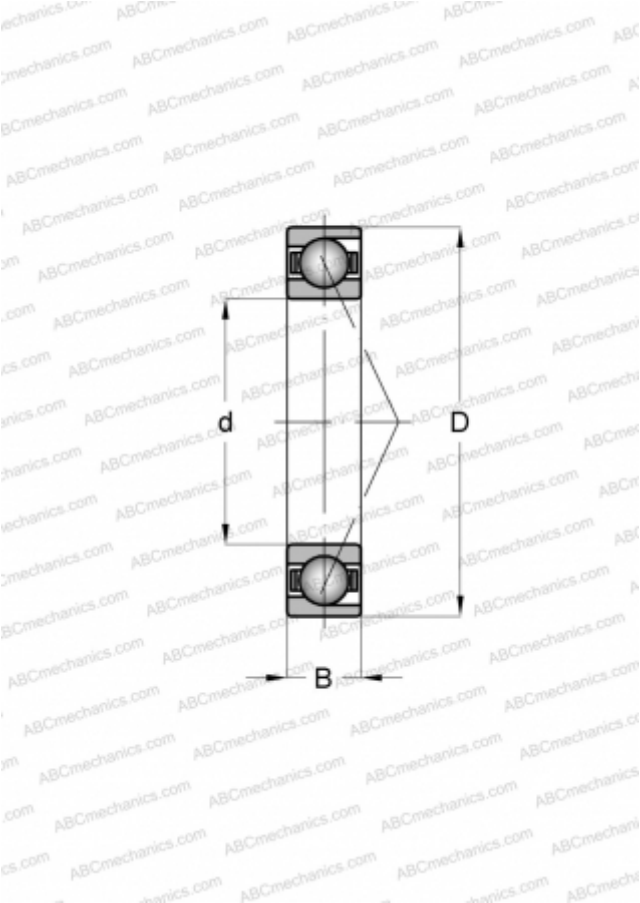

Technical specification

DIMENSIONS, MM	
d	12,000
D	32,000
B	10,000
WEIGHT, KG	0,030
MANUFACTURER	FAG