S7000 ACD GB HC P4A SKF

Angular contact ball bearings

TYPE: Ball bearings, Angular contact ball bearing, Precision (spindle), Contact angle 25°, Ceramic ball, mounting by pair or sets, non-contact seal, medium preload (SKF)

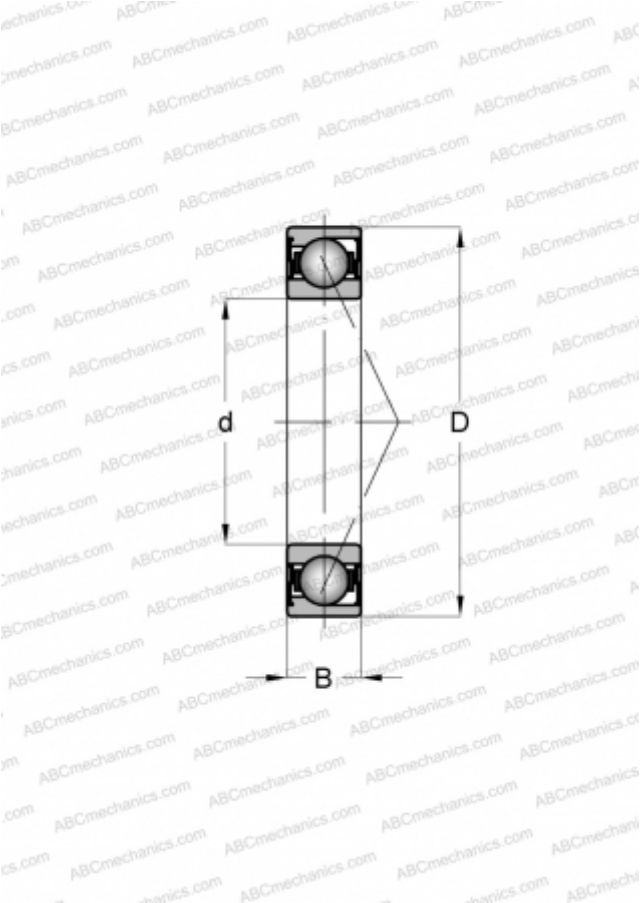

Technical specification

DIMENSIONS, MM	
d	10,000
D	26,000
B	8,000
WEIGHT, KG	0,020
MANUFACTURER	SKF