71910 ACB GC HC P4A SKF

Angular contact ball bearings

TYPE: Ball bearings, Angular contact ball bearing, Precision (spindle), Contact angle 25°, High speed, ceramic ball, design B, mounting by pair or sets, heavy preload (SKF)

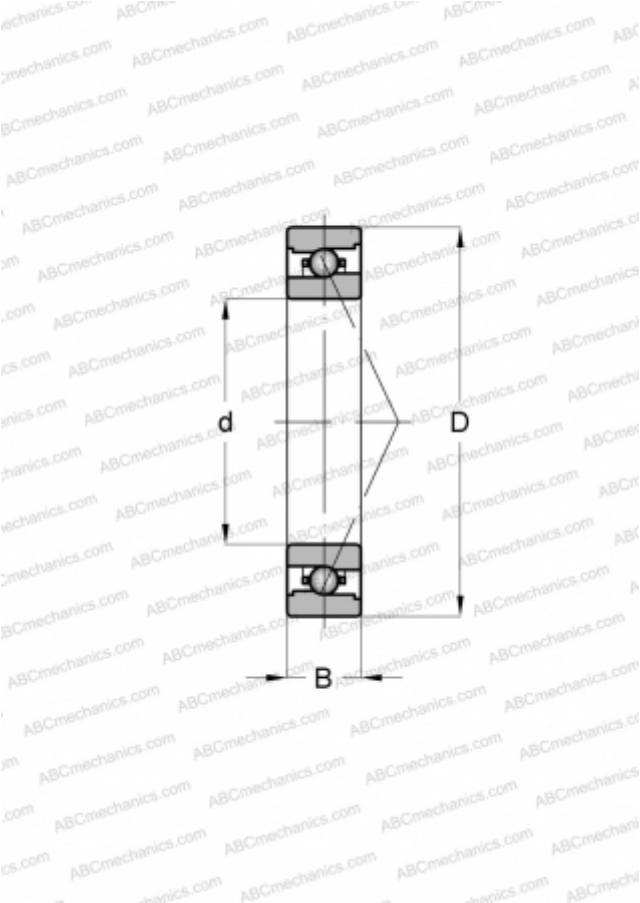

Technical specification

DIMENSIONS, MM	
d	50,000
D	72,000
B	12,000

MANUFACTURER	SKF