S71906 ACB GA HC P4A SKF

Angular contact ball bearings

TYPE: Ball bearings, Angular contact ball bearing, Precision (spindle), Contact angle 25°, High speed, ceramic ball, design B, mounting by pair or sets, non-contact seal, light preload (SKF)

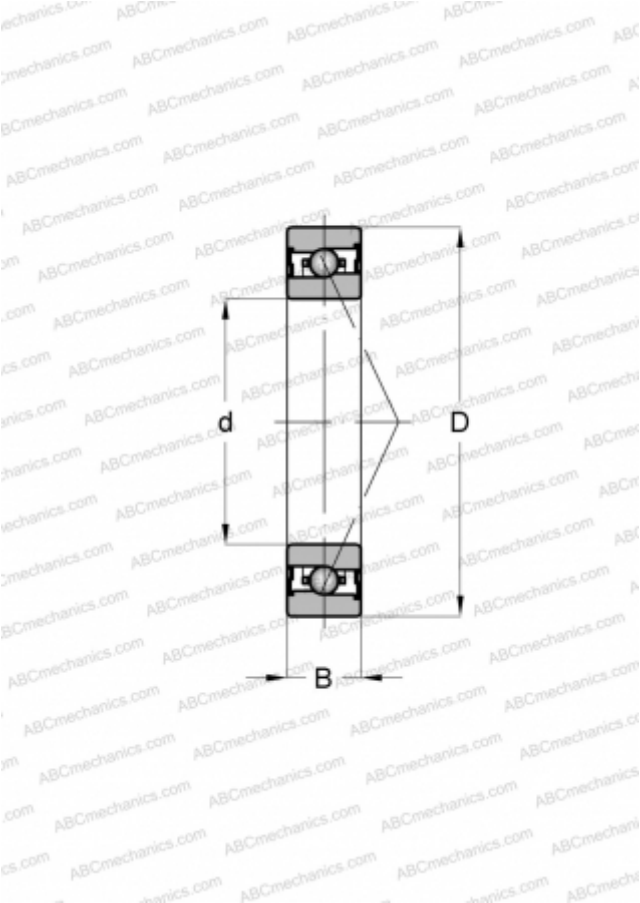

Technical specification

DIMENSIONS, MM	
d	30,000
D	47,000
B	9,000

MANUFACTURER	SKF