XC101HE UM BARDEN

Angular contact ball bearings

TYPE: Ball bearings, Angular contact ball bearing, Precision (spindle), Contact angle 25°, Rings made of stainless steel CRONIDUR 30, ceramic balls, medium preload (BARDEN)

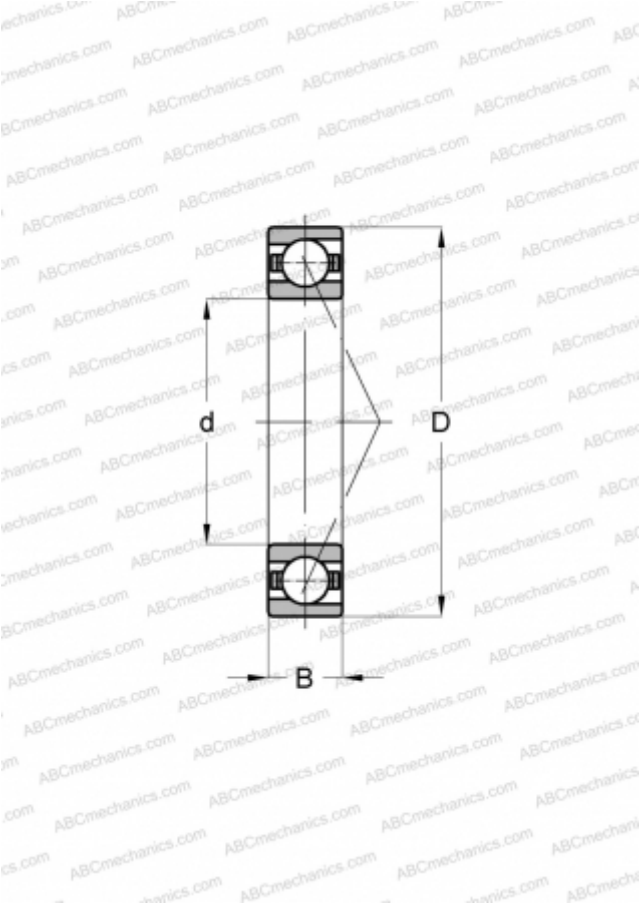

Technical specification

DIMENSIONS, MM	
d	12,000
D	28,000
B	8,000
WEIGHT, KG	0,020
MANUFACTURER	BARDEN