71972 ACDMA/P4A SKF

Angular contact ball bearings

TYPE: Ball bearings, Angular contact ball bearing, Precision (spindle), Contact angle 25°, Machined brass cage, outer ring centred, mounting by pairs or sets (SKF)

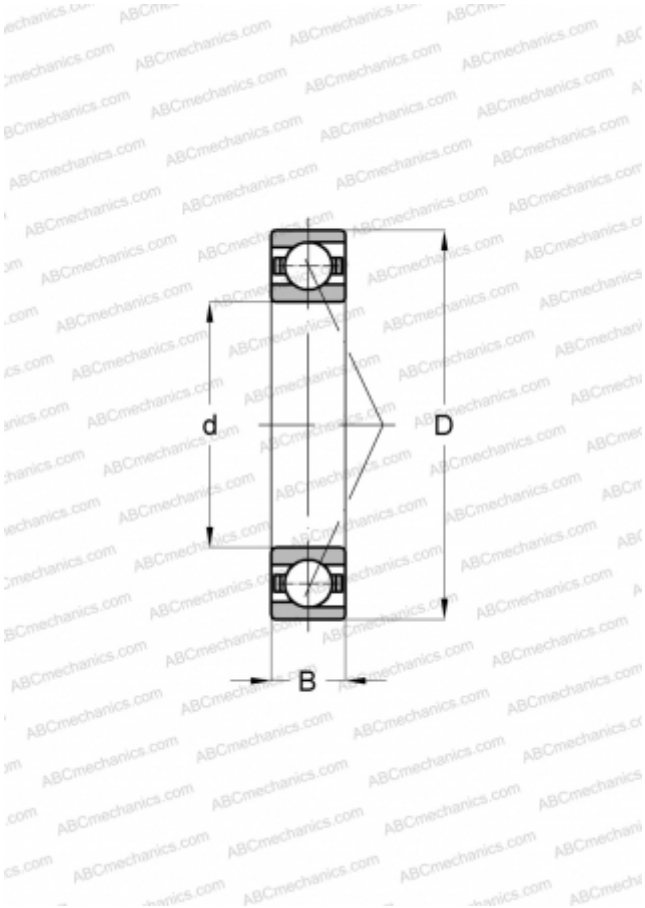

Technical specification

DIMENSIONS, MM	
d	360,000
D	480,000
B	56,000

MANUFACTURER	SKF