71968 ACDMA/HCP4A SKF

Angular contact ball bearings

TYPE: Ball bearings, Angular contact ball bearing, Precision (spindle), Contact angle 25°, Machined brass cage, outer ring centred, ceramic ball, mounting by pairs or sets (SKF)

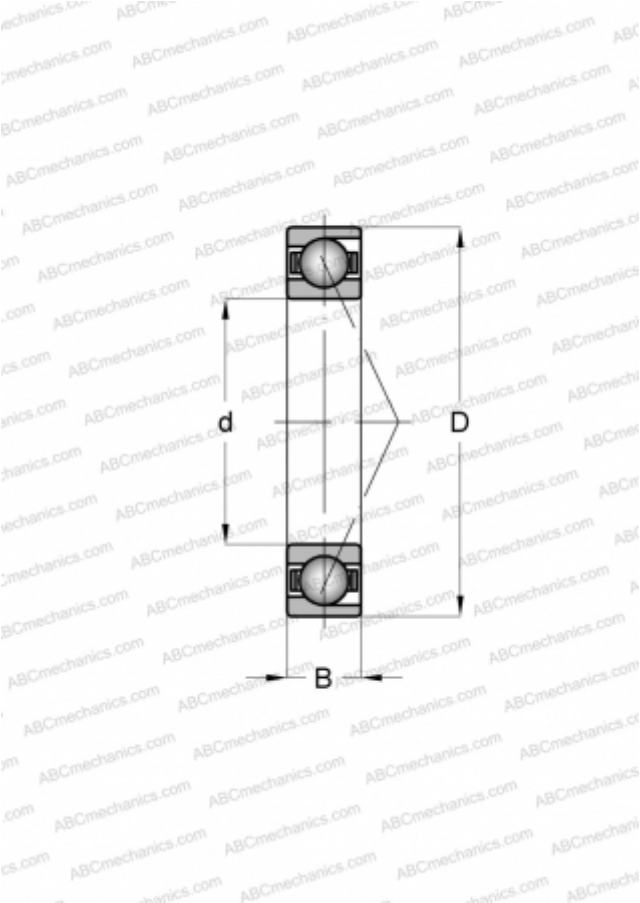

Technical specification

DIMENSIONS, MM	
d	340,000
D	460,000
B	56,000

MANUFACTURER	SKF