30BER10X TSULP3 NSK

Angular contact ball bearings

TYPE: Ball bearings, Angular contact ball bearing, Precision (spindle), Contact angle 25°, Rings made of stainless steel SHX, high speed, ceramic balls, mounting by pair or sets, light preload (NSK)

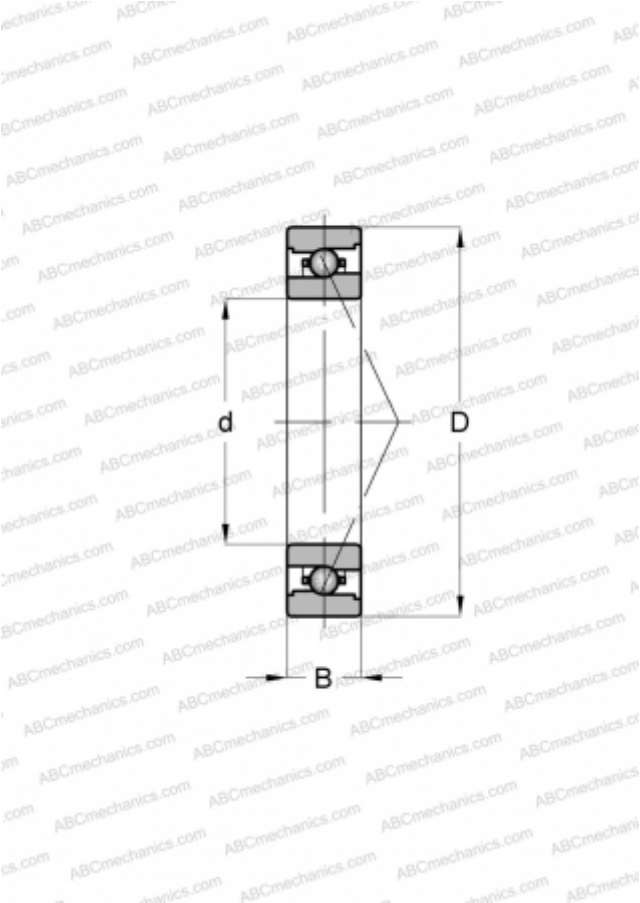

Technical specification

DIMENSIONS, MM	
d	30,000
D	55,000
B	13,000
WEIGHT, KG	0,116
MANUFACTURER	NSK