102124 FAG

Angular contact ball bearings

TYPE: Ball bearings, Angular contact ball bearing, Double row, Hub bearing (unit), FAG production, generation 2

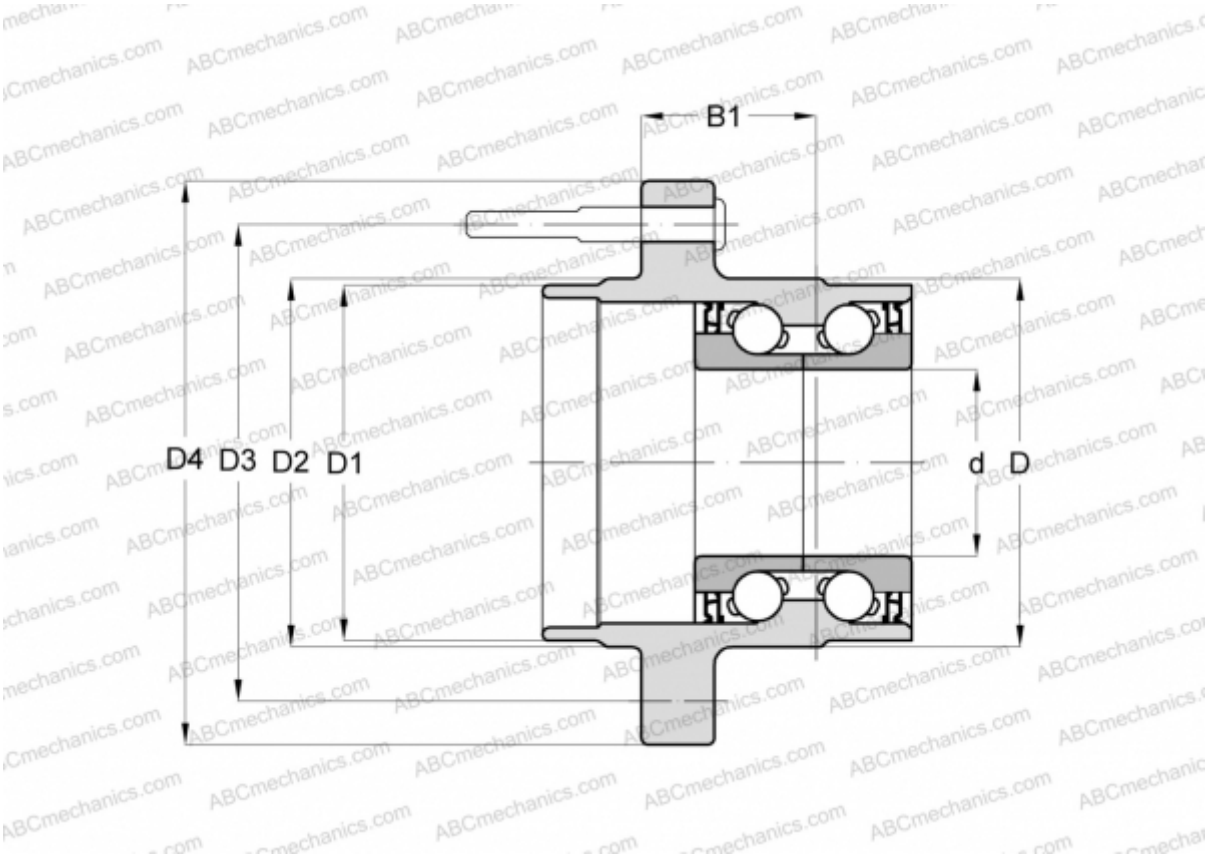

Technical specification

DIMENSIONS, MM	
d	27,000
D	83,100
D1	65,500
D2	67,500
D3	114,300
D4	136,000
B1	52,500

MANUFACTURER	FAG