ZKLFA 1050 2Z INA

Axial angular contact ball bearing

TYPE: Ball bearings, Axial angular contact ball bearing, Unit, Series ZKLFA, double direction, with flange, gap seals on both side

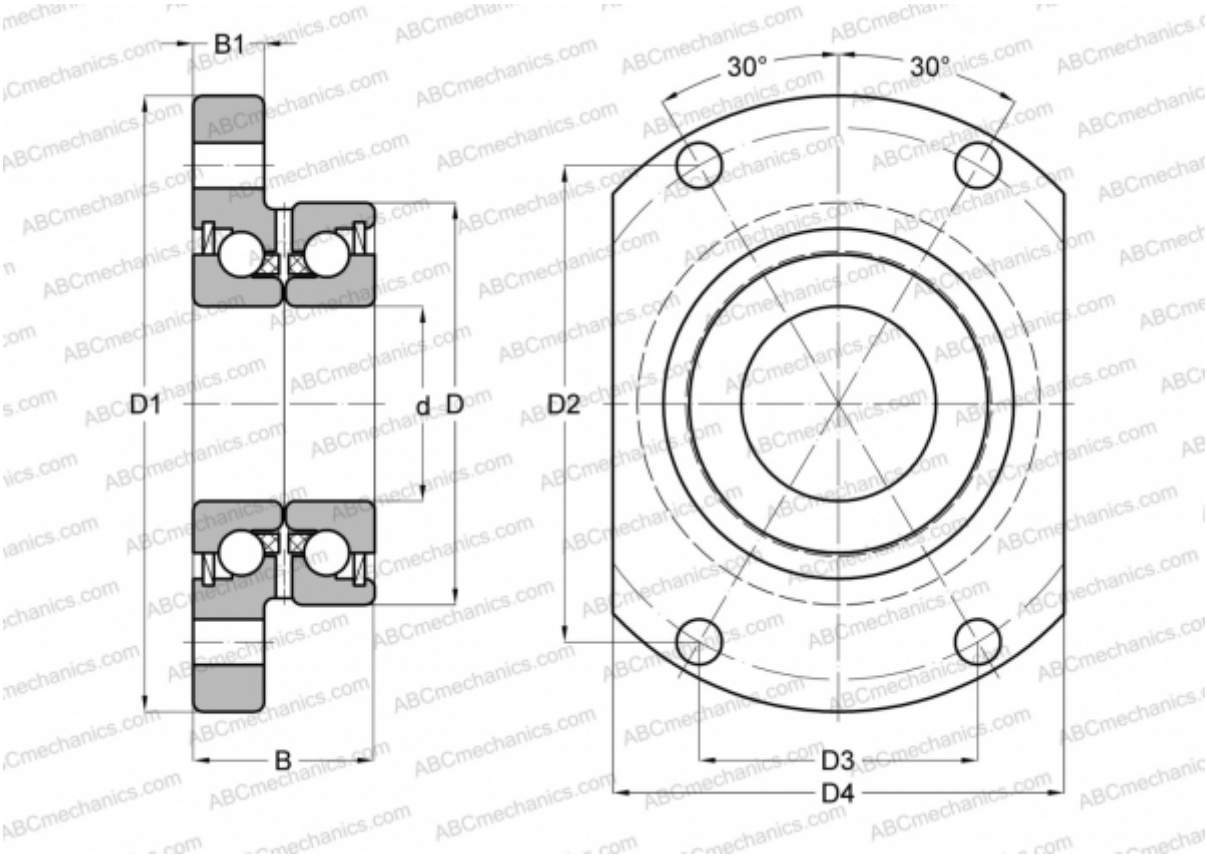

Technical specification

DIMENSIONS, MM	
d	10,000
D	32,000
D1	50,000
D2	34,500
D3	20,000
D4	35,000
B	20,000
B1	8,000
WEIGHT, KG	0,180
MANUFACTURER	INA