DKLFA 1575 2RS INA

Axial angular contact ball bearing

TYPE: Ball bearings, Axial angular contact ball bearing, Unit, Series DKLFA, double direction, with flange, lip seals on both side

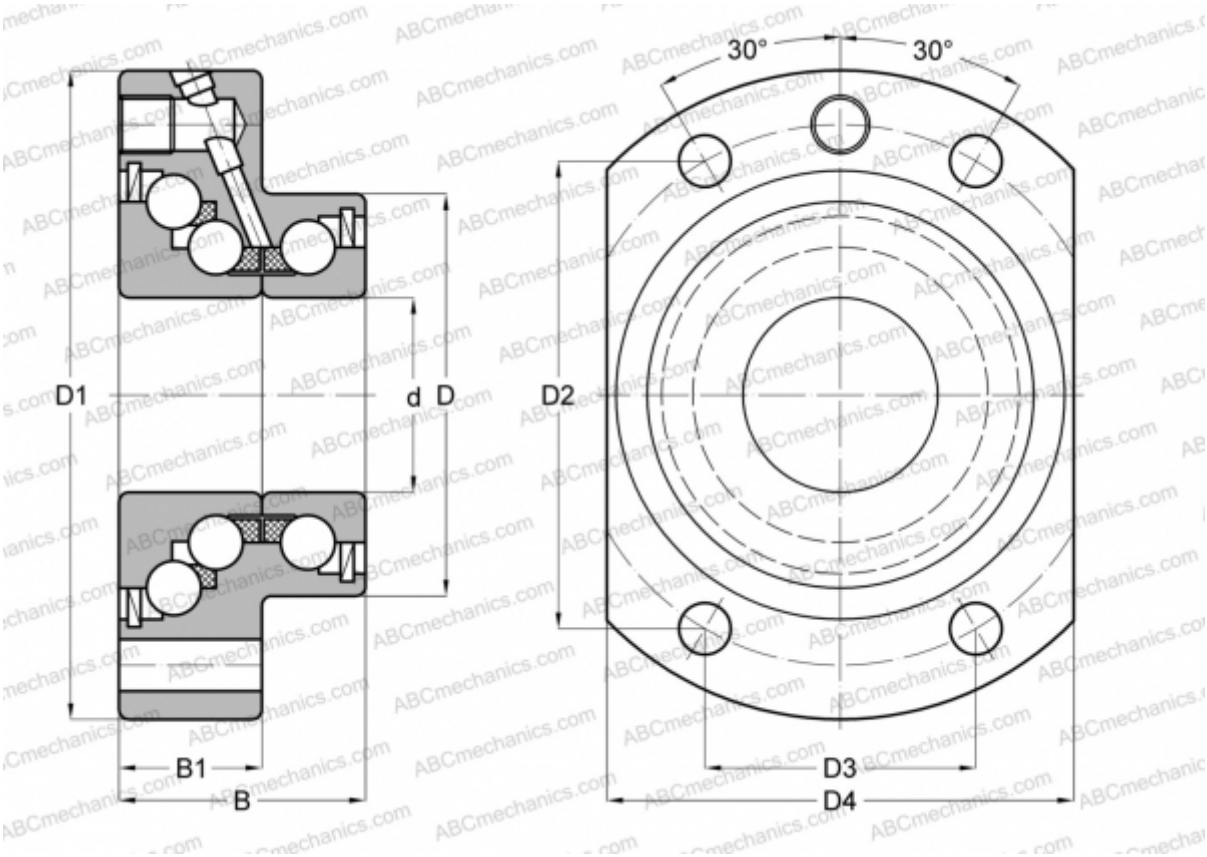

Technical specification

DIMENSIONS, MM	
d	15,000
D	45,000
D1	75,000
D4	55,000
B	32,000
B1	18,000
WEIGHT, KG	0,530
MANUFACTURER	INA