GRAE45-NPP-B-FA125.5 INA

Insert bearings

TYPE: Ball bearings, Radial insert bearings, With eccentric locking collar, Spherical outer ring, Series GRAE..-NPP-B(INA), seals on both side, corrosian resistant

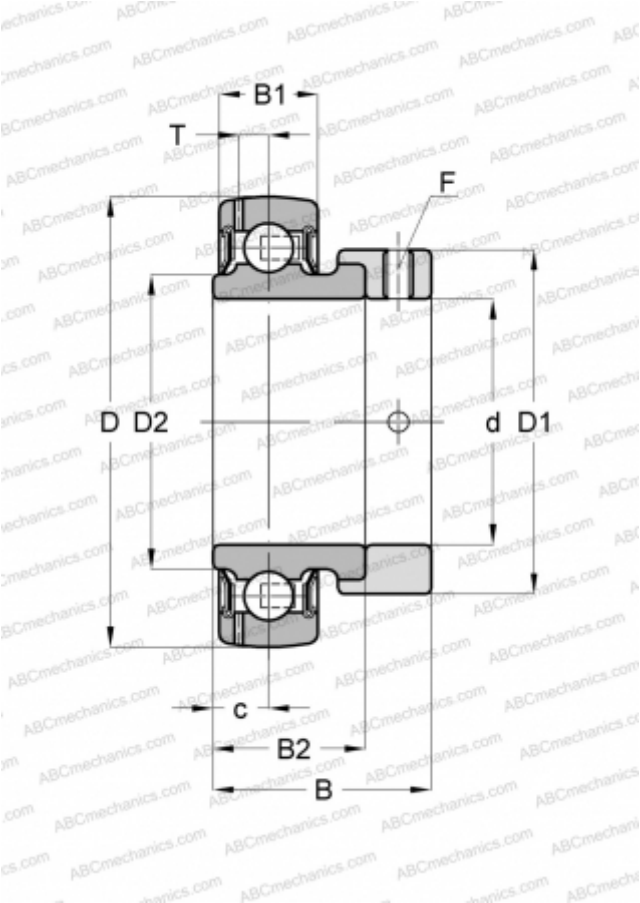

Technical specification

DIMENSIONS, MM	
d	45,000
D	85,000
D1	63,000
D2	54,300
B	43,800
B1	22,000
B2	30,200
c	11,000
T	6,400
F	5
WEIGHT, KG	0,690
MANUFACTURER	INA

REPLACES
GRAE45-XL-NPP-B-FA125.5