E40-KRR-B INA

Insert bearings

TYPE: Ball bearings, Radial insert bearings, With eccentric locking collar, Spherical outer ring, Series E..-KRR-B(INA), seals on both side

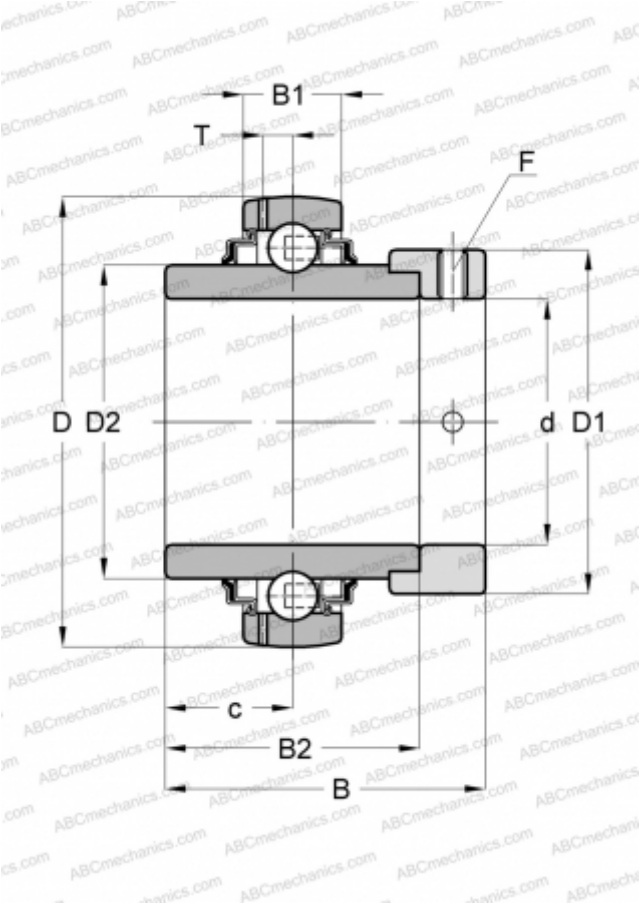

Technical specification

DIMENSIONS, MM	
d	40,000
D	80,000
D1	58,000
D2	52,300
B	56,500
B1	21,000
B2	42,900
c	21,400
F	5

WEIGHT, KG	0,730
MANUFACTURER	INA

REPLACES
E40-XL-KRR-B