KHR 204-12 AE ASAHI

Insert bearings

TYPE: Ball bearings, Radial insert bearings, With eccentric locking collar, Cylindrical outer ring, Series KHR, seals on both side, inch size

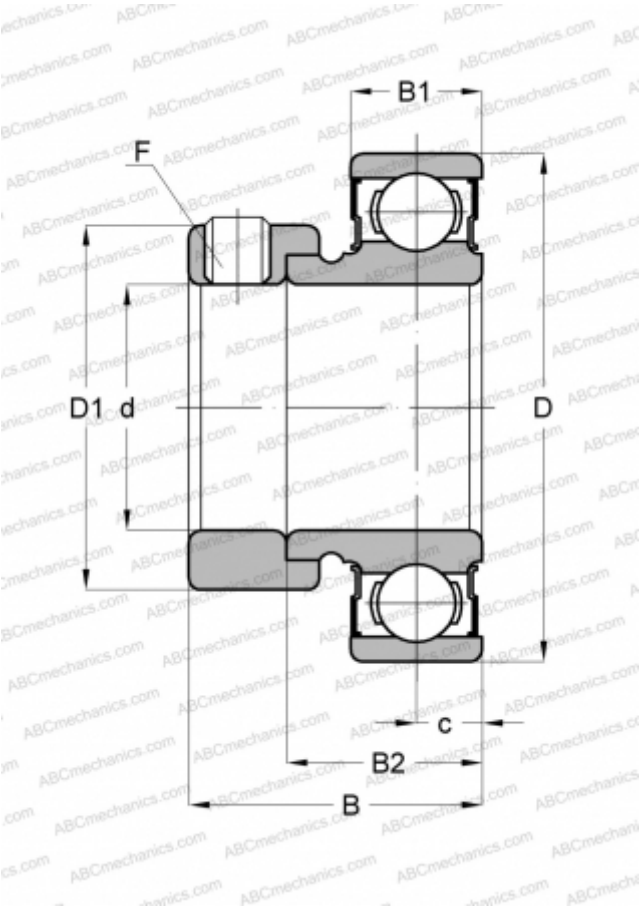

Technical specification

DIMENSIONS, MM	
d	19,050
D	47,000
D1	33,338
B	29,515
B1	13,995
B2	21,488
c	7,493
F	1/4-28
WEIGHT, KG	0,159
MANUFACTURER	ASAHI