KHR 206-18 AE ASAHI

Insert bearings

TYPE: Ball bearings, Radial insert bearings, With eccentric locking collar, Cylindrical outer ring, Series KHR, seals on both side, inch size

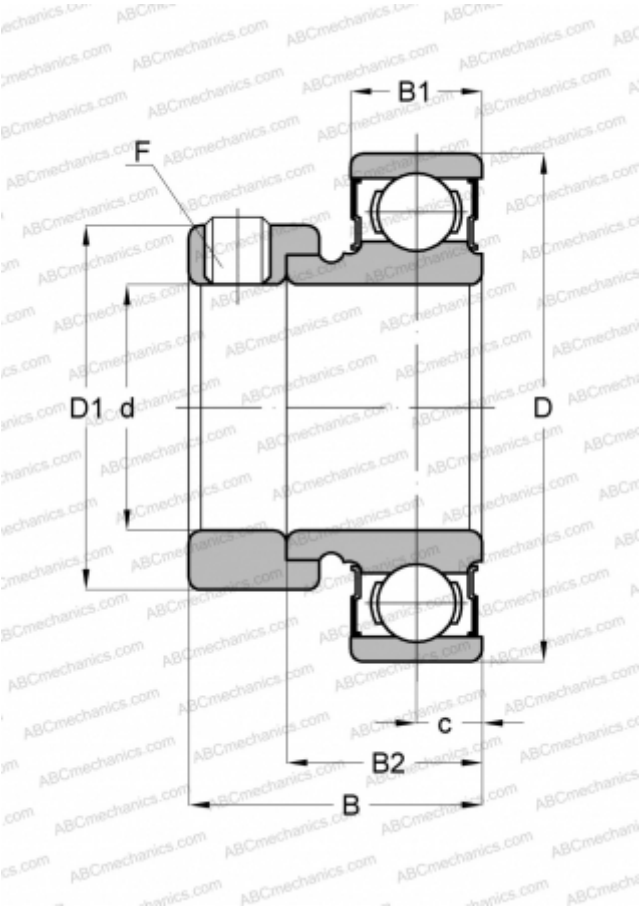

Technical specification

DIMENSIONS, MM	
d	28,575
D	61,999
D1	44,450
B	35,720
B1	16,002
B2	23,825
c	8,992
F	5/16-24
WEIGHT, KG	0,308
MANUFACTURER	ASAHI