GYE25-KRR-B INA

Insert bearings

TYPE: Ball bearings, Radial insert bearings, Grub screw to inner ring, Spherical outer ring, Series GYE..-KRR-B(INA), seals on both side

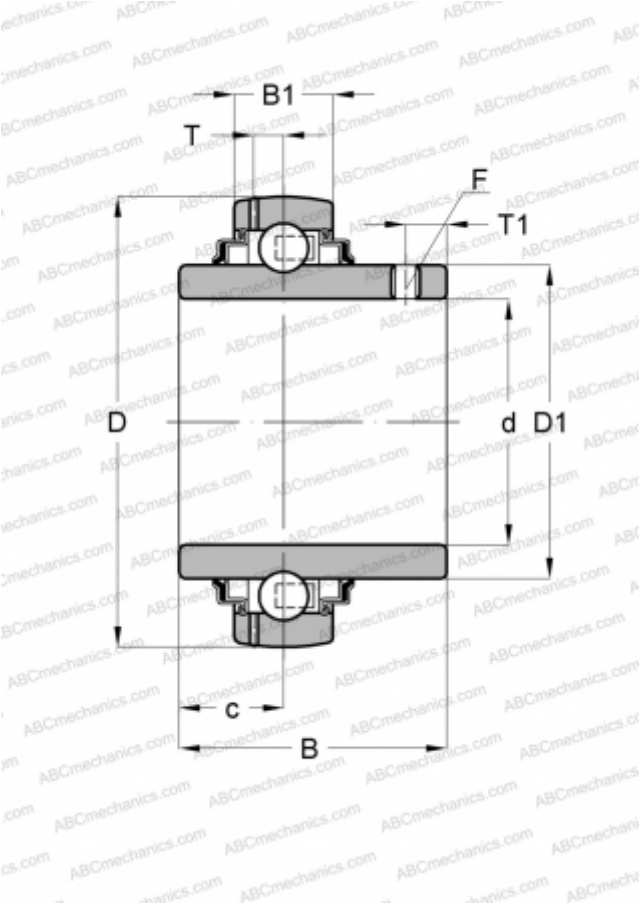

Technical specification

DIMENSIONS, MM	
d	25,000
D	52,000
D1	33,800
B	34,100
B1	15,000
c	14,300
T	3,900
T1	5,000
F	2.5

WEIGHT, KG	0,190
MANUFACTURER	INA

REPLACES
GYE25-XL-KRR-B