GYE17-KRR-B-VA INA

Insert bearings

TYPE: Ball bearings, Radial insert bearings, Grub screw to inner ring, Spherical outer ring, Series GYE..-KRR-B(INA), seals on both side, corrosian resistant

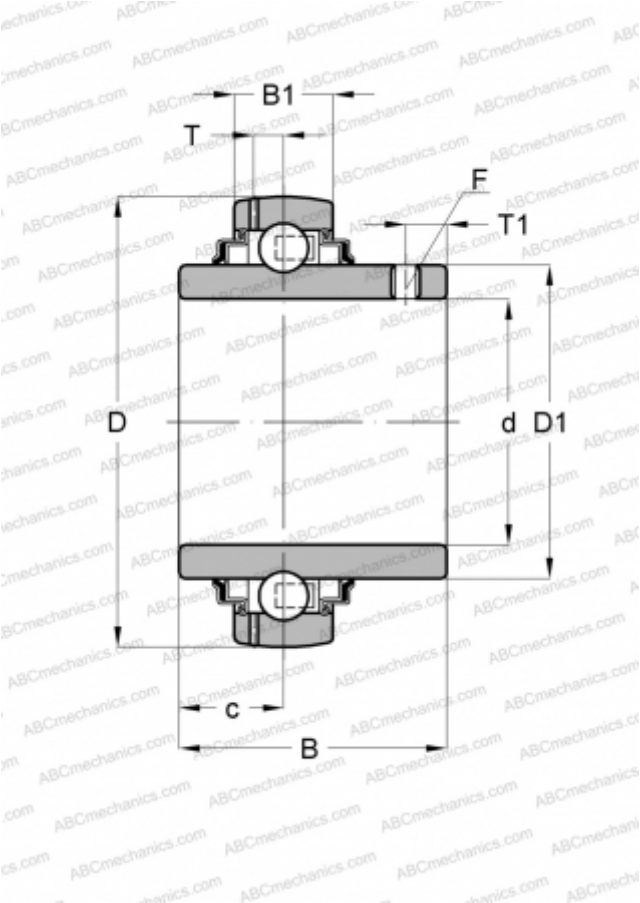

Technical specification

DIMENSIONS, MM	
d	17,000
D	40,000
D1	23,900
B	25,000
B1	12,000
c	9,600
T	3,400
T1	4,000
F	2.5

WEIGHT, KG	0,080
MANUFACTURER	INA

REPLACES
GYE17-XL-KRR-B-VA