B 4 ASAHI

Insert bearings

TYPE: Ball bearings, Radial insert bearings, Grub screw to inner ring, Spherical outer ring, Series B, seals on both side

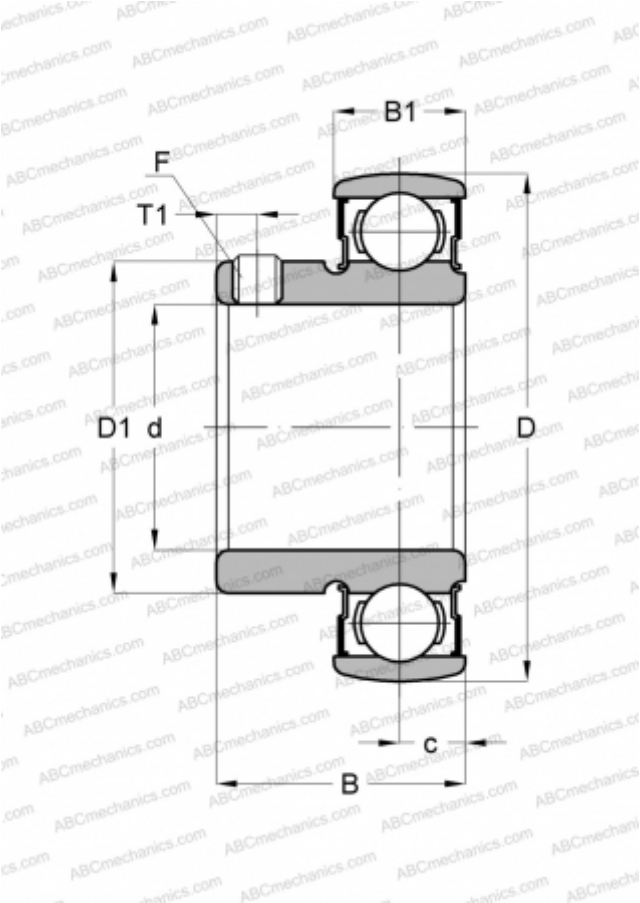

Technical specification

DIMENSIONS, MM	
d	20,000
D	47,000
D1	29,000
B	24,700
B1	14,000
c	7,000
T1	4,500
F	M5 x 0.8
WEIGHT, KG	0,120
MANUFACTURER	ASAHI