# UK X07 + HA2307 ASAHI

Insert bearings

TYPE: Ball bearings, Radial insert bearings, With adapter sleeve, Spherical outer ring, Series UK X, seals on both side, inch size

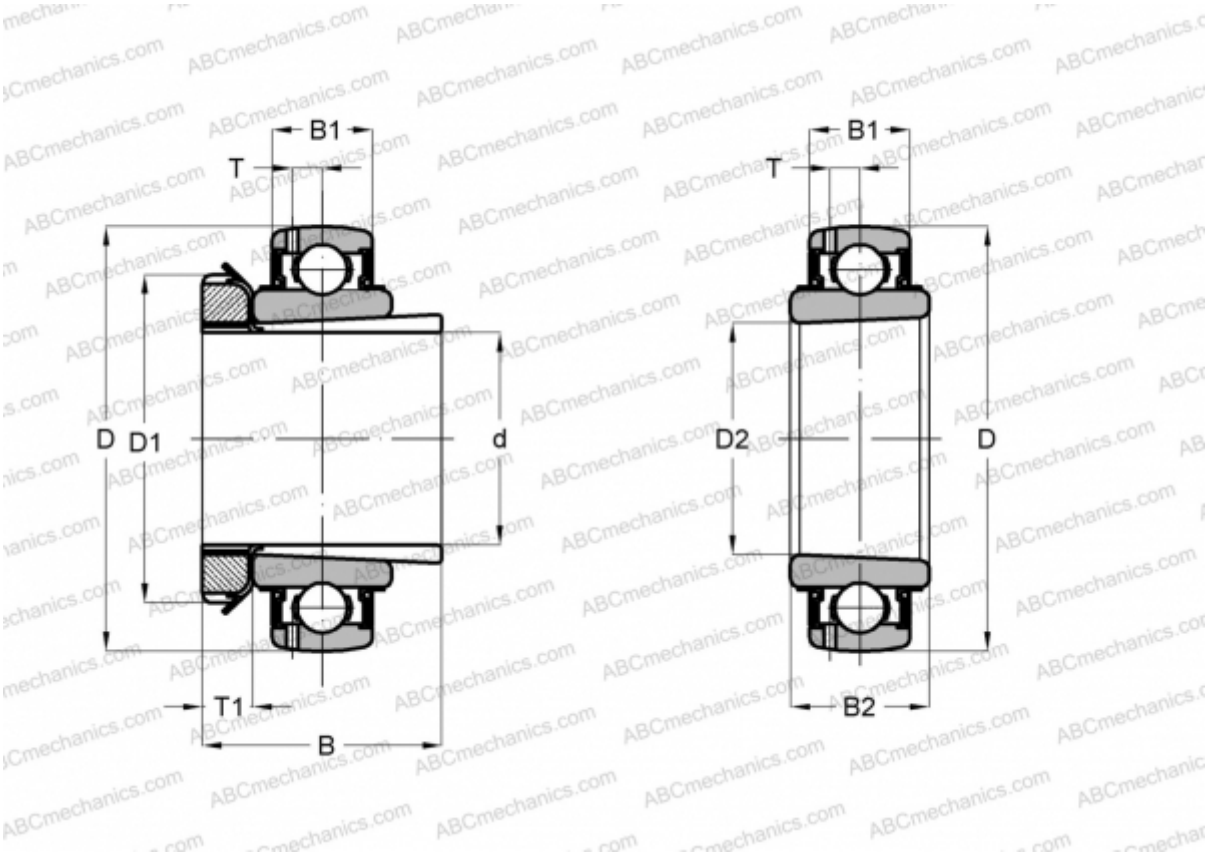


## Technical specification

| DIMENSIONS, MM | |
|---|---|
| d | 30,162 |
| D | 80,000 |
| D1 | 51,994 |
| D2 | 35,001 |
| B | 43,002 |
| B1 | 21,006 |
| B2 | 29,007 |
| T | 6,198 |
| T1 | 8,992 |
| **WEIGHT, KG** | 0,699 |
| **MANUFACTURER** | ASAHI |