NA030CP0 KAYDON

Thin section bearing

TYPE: Ball bearings, Thin section ball bearing, Radial, Open, stainless steel ball, inch size

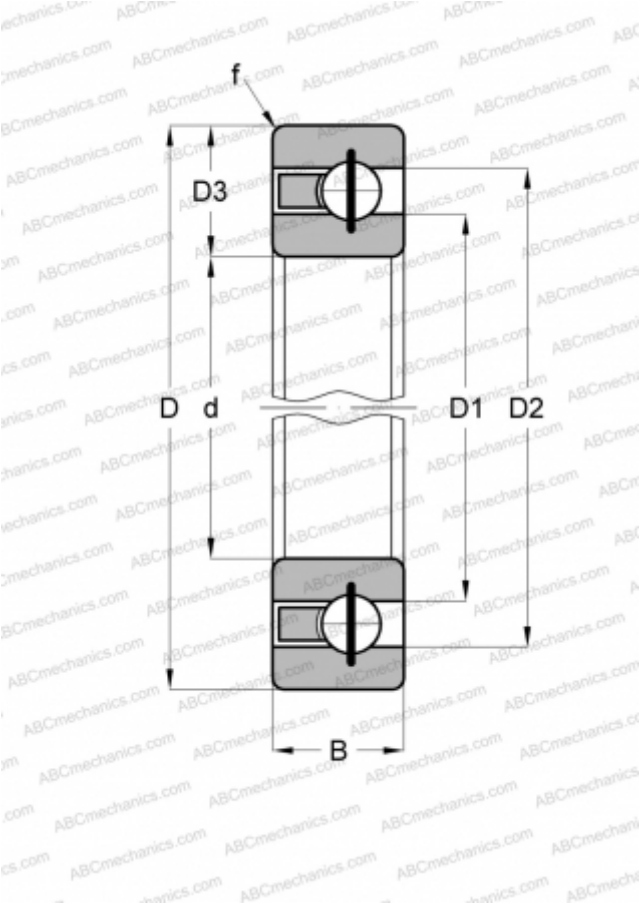

Technical specification

DIMENSIONS, MM	
d	76,200
D	88,905
D1	80,924
D2	84,176
D3	6,350
B	6,350
f	0,635
WEIGHT, KG	0,068
MANUFACTURER	KAYDON