K02508CP0 KAYDON

Thin section bearing

TYPE: Ball bearings, Thin section ball bearing, Radial, Open, metric

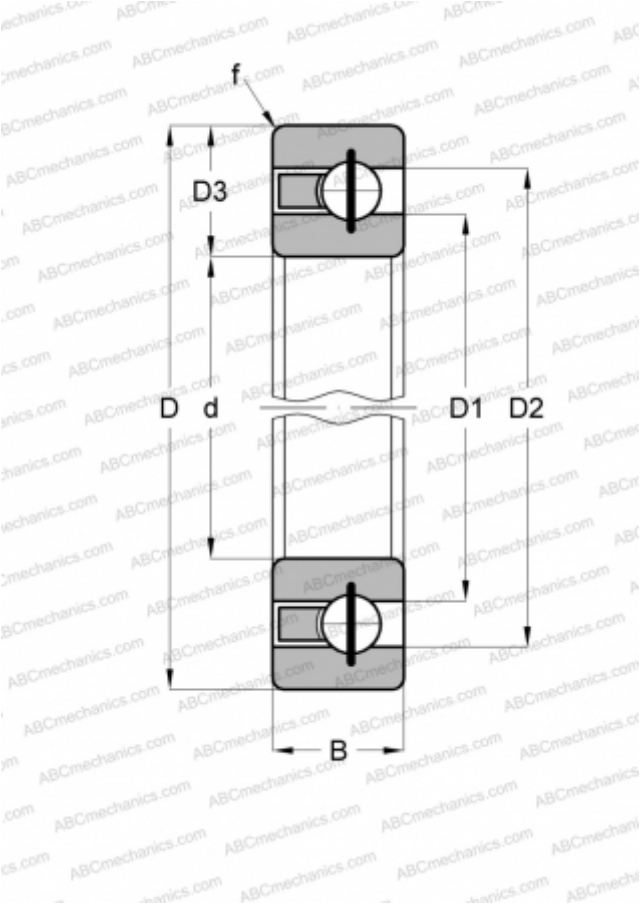

Technical specification

DIMENSIONS, MM	
d	25,000
D	41,000
D1	30,900
D2	35,100
D3	8,000
B	8,000
f	0,800
WEIGHT, KG	0,060
MANUFACTURER	KAYDON