K05013CP0 KAYDON

Thin section bearing

TYPE: Ball bearings, Thin section ball bearing, Radial, Open, metric

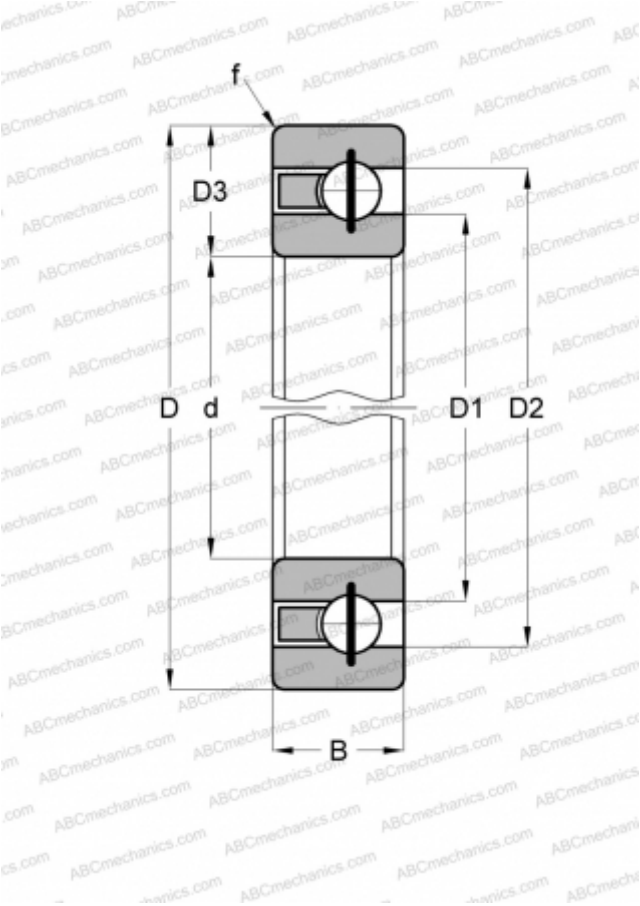

Technical specification

DIMENSIONS, MM	
d	50,000
D	76,000
D1	59,700
D2	66,300
D3	13,000
B	13,000
f	1,500
WEIGHT, KG	0,180
MANUFACTURER	KAYDON