K02520CP0 KAYDON

Thin section bearing

TYPE: Ball bearings, Thin section ball bearing, Radial, Open, metric

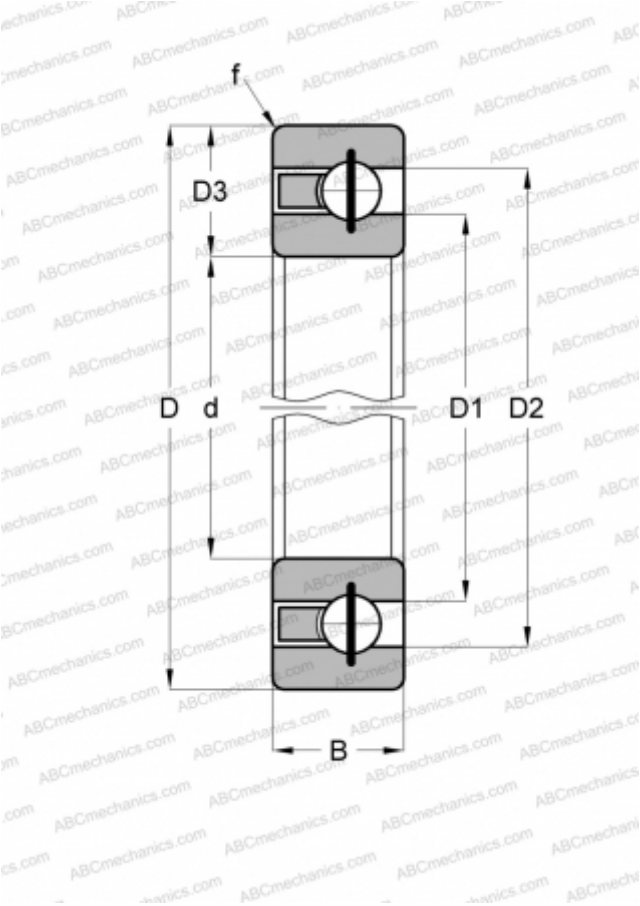

Technical specification

DIMENSIONS, MM	
d	25,000
D	65,000
D1	40,000
D2	50,000
D3	20,000
B	20,000
f	1,500
WEIGHT, KG	0,340
MANUFACTURER	KAYDON