# S11003CS0 KAYDON

Thin section bearing

TYPE: Ball bearings, Thin section ball bearing, Radial, Open, ultrathin, metric

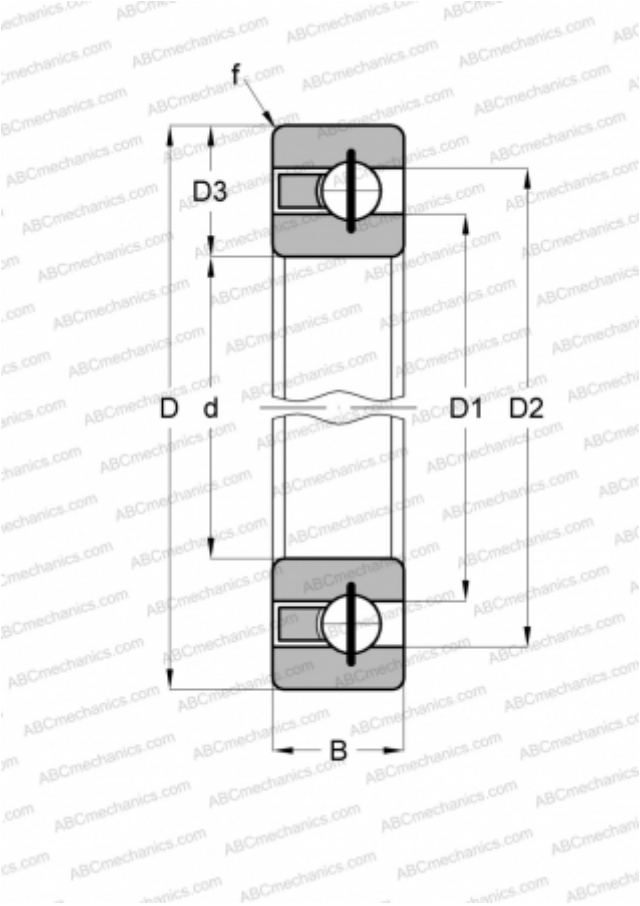


## Technical specification

| DIMENSIONS, MM | |
|---|---|
| d | 110,000 |
| D | 116,000 |
| D1 | 112,200 |
| D2 | 113,800 |
| D3 | 3,000 |
| B | 2,500 |
| f | 0,250 |
| **WEIGHT, KG** | 0,016 |
| **MANUFACTURER** | KAYDON |