# LR5002-X-2RS INA

Track rollers

TYPE: Ball bearings, Track rollers, Double row, Without profile, Sealed on both sides, cylindrical outer ring

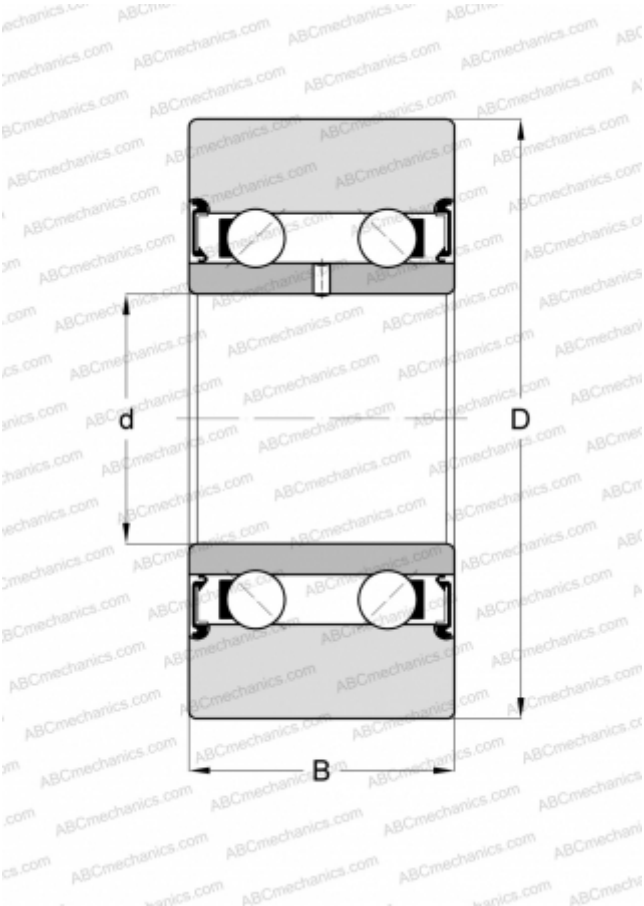


## Technical specification

| DIMENSIONS, MM | |
|---|---|
| d | 15,000 |
| D | 35,000 |
| B | 13,000 |
| **WEIGHT, KG** | 0,050 |
| **MANUFACTURER** | INA |