RSL183007-A INA

Cylindrical roller bearings

TYPE: Roller bearings, Cylindrical roller bearings, Single row, Without outer ring, Full complement cylindrical roller bearing

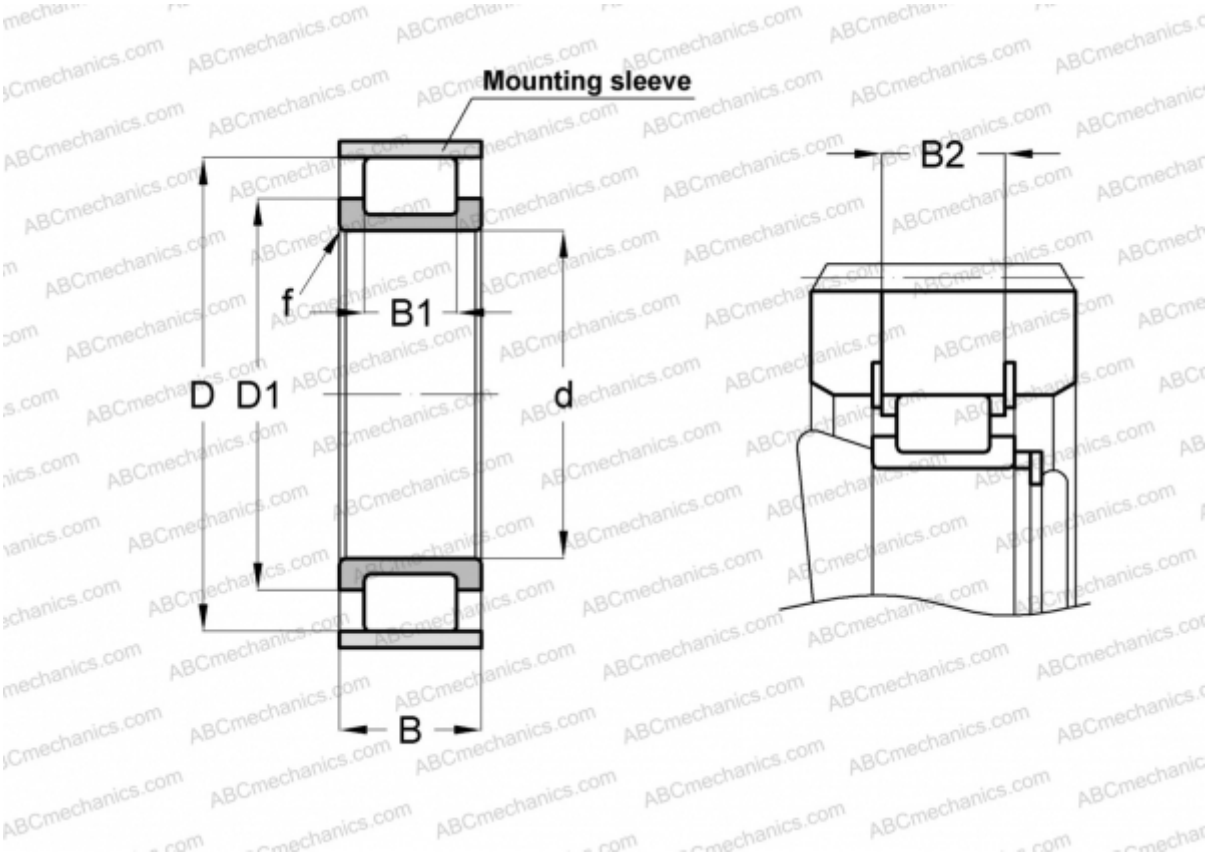

Technical specification

DIMENSIONS, MM	
d	35,000
D	55,520
D1	45,000
B	20,000
B1	11,000
B2	17,700
f	1,000
WEIGHT, KG	0,150
MANUFACTURER	INA

ASSOCIATED PRODUCTS

F-87733 + JV55